Channel Cover MSA 41

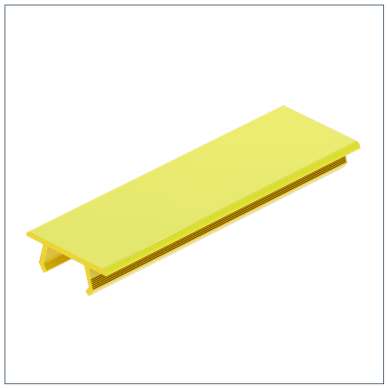

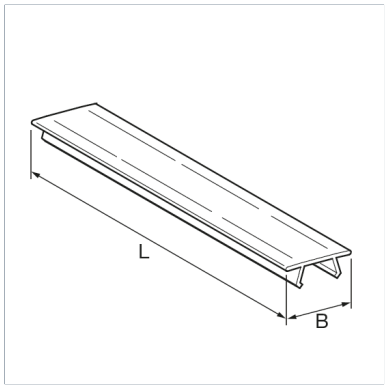

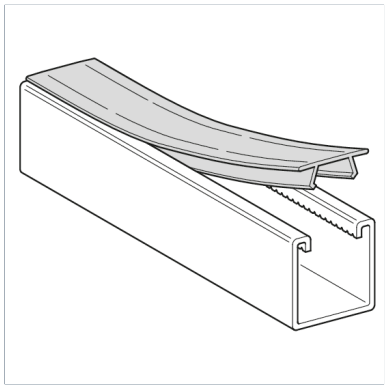

General Information

For covering the opening of channels. Prevents build-up of dirt deposits inside the channel. Provdes: easy cleaning due to even surface dustproof transitions tight fit by means of strong clamping free of halogens and lack disturbing substances

Installation

To be mounted by hand without tool.

Temperature

Max. temperature	80 °C
Min. temperature	-20 °C

Levels of Resistance

Limited resistance	weather resistant

Material Properties

Halogen-free	0
UV-resistant	0

Material

Primary element material	HDPE
Corrosion protection class	C2

Types

Type	Weight	Quantity	Part number
MSA 41	0.099 kg/m	2 m	180623

Dimensions

Type	B	L
MSA 41	35 mm	2000 mm

Certification