Magnetic Holder MN SW

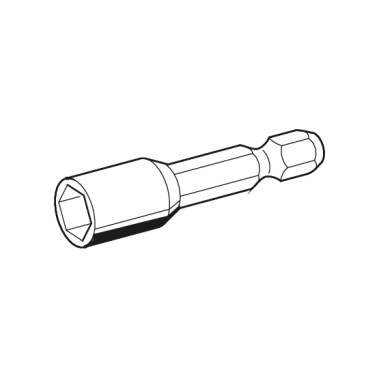

General Information

The magnetic tool attachment ensures that drill bits or screws do not fall down while working.

Material Properties

Halogen-free	0
UV-resistant	0

Material

Primary element material	Tool steel, HRC 60-63
Corrosion protection class	C2

Types

Type	Weight	Quantity	Part number
MN SW 1/4''	0,01 kg/pcs.	1 pcs.	412959
MN SW 7 MM	0,018 kg/pcs.	1 pcs.	412960

Certification