Brace Joint SG

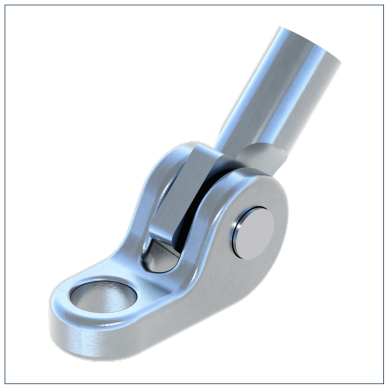

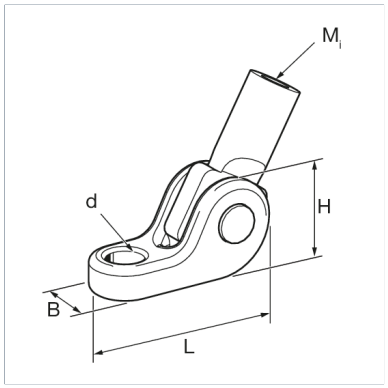

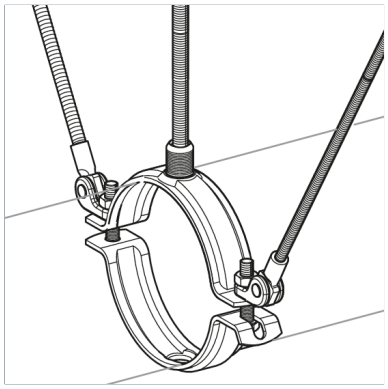

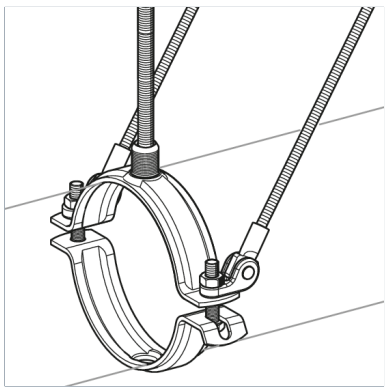

General Information

The Support Joint is fixed directly to the flanges of the pipe clamp to provide additional bracing to the overall pipe support. Adjustable brace angle. The Support Joint can be rotated 180° radially about the clamping bolt connections either side of the pipe clamp. Captive pivoting link eye.

Installation

Adjustment of Support Joint by means of the pipe clamp's clamping bolts. Subsequently the threaded rod is screwed in the Link Eye.

Suitable support joint/clamp combinations:

Type	Clamps
SG M10-11	Stabil D-3G (133-140 to 167-173) Stabil D-A (76-81 to 124-129) Stabil RB-A (13-18 to 45-49)
SG M10-13	Stabil D-3G (176-184 to 310-316) Stabil D-A (133-140 to 297-303) Stabil RB-A (57-61 to 214-220) Stabil D-M16 (218-227 to 271-277)
SG M10-17	Stabil D-A (316-324 to 513-521) Stabil RB-A (248-254 to 603-610)

Material Properties

Halogen-free	0
UV-resistant	0

Material

Primary element material	cast steel
Connecting element material	steel
Surface finish	electro galvanized (Fe//Zn)
Corrosion protection class	C2

Forces

Type	Vmax α = 0° - 45°	Vmax α = 90°
SG M10 -11	15,00 kN	5,00 kN
SG M10 -13	16,00 kN	6,00 kN
SG M10 -17	15,00 kN	7,00 kN

Types

Type	Weight	Quantity	Part number
SG M10 -11	0,137 kg/pcs.	25 pcs.	115044

Brace Joint SG

Type	Weight	Quantity	Part number
SG M10 -13	0,153 kg/pcs.	25 pcs.	115045
SG M10 -17	0,19 kg/pcs.	25 pcs.	115046

Dimensions

Type	B	d	H	L	Mi
SG M10 -11	20 mm	11 mm	28 mm	52 mm	M10
SG M10 -13	22 mm	13 mm	28 mm	54 mm	M10
SG M10 -17	27 mm	17 mm	28 mm	59,5 mm	M10

Certification

epd-global
Powered by EPD-Norway