Ducting Bracket LCO 20/30/40

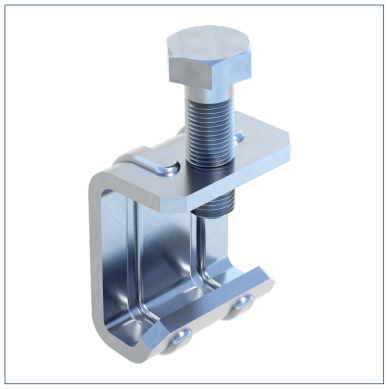

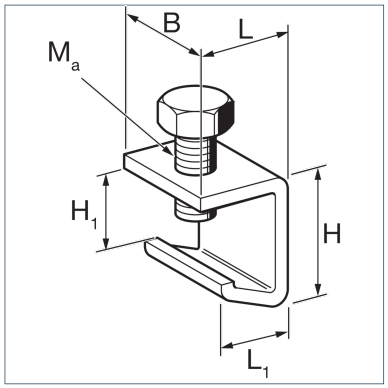

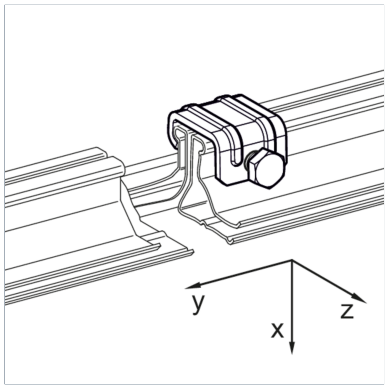

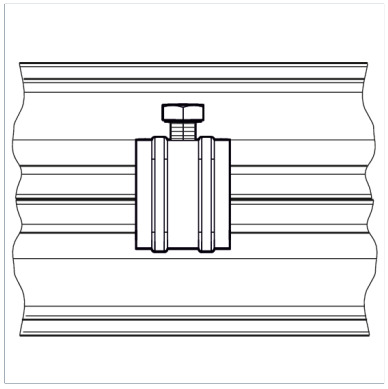

General Information

For connecting formed duct parts. When tightening the Bracket, the flanges of the duct parts are pressed against each other. The ducting bracket is suitable for ducts with flange widths of 20 mm, 30 mm and 40 mm.

Installation

The distance between two Ducting Brackets should not exceed 200 mm. Tighten the bolt with a torque of approx. 5 Nm.

Material Properties

Halogen-free	0
UV-resistant	0

Material

Primary element material	steel
Connecting element material	steel
Surface finish	electro galvanized (Fe//Zn)
Corrosion protection class	C2

Types

Type	Weight	Quantity	Part number
LCO 20/30/40	0,056 kg/pcs.	200 pcs.	117333

Dimensions

Type	B	H	H1	L	L1	Ma
LCO 20/30/40	30 mm	36,1 mm	23 mm	20 mm	16 mm	M 8

Certification

Stahl