Ducting Clamp PLU 2G-N

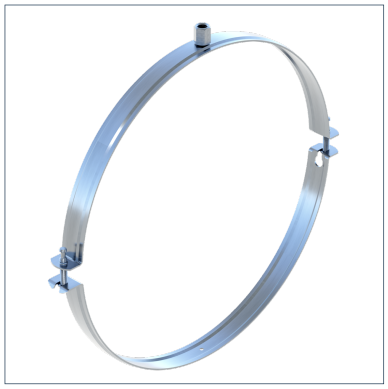

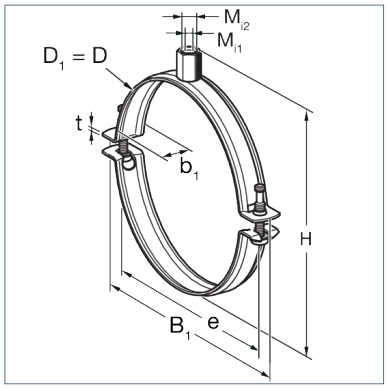

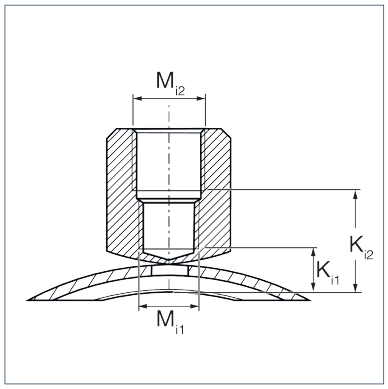

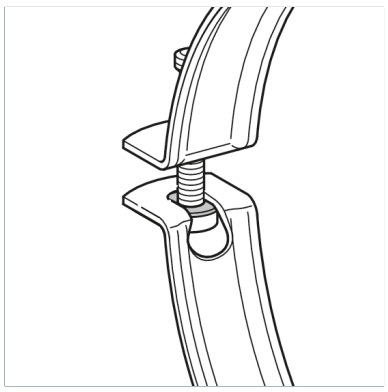

General Information

Two-piece pipe clamp for simple installation of spiral-seam ducts.

Installation

Tighten upper part of the pipe clamp without the interfering lower part. Hook the lower part, provided with a keyhole, into the fixed clamping bolt. After mounting of the pipe and locating into the pivot screw, the clamping bolt is fixed behind the bending; then tighten clamping bolt with max. 2 Nm.

Thread connection: M8/M10

Material Properties

Halogen-free	0
UV-resistant	0

Material

Primary element material	steel
Connecting element material	steel
Surface finish	electro galvanized (Fe//Zn)
Corrosion protection class	C2

Forces

Type	-V{Z,perm.}
PLU 2G-N DN 71	0,80 kN
PLU 2G-N DN 80	0,80 kN
PLU 2G-N DN 90	0,80 kN
PLU 2G-N DN 100	0,80 kN
PLU 2G-N DN 112	0,80 kN
PLU 2G-N DN 125	0,80 kN
PLU 2G-N DN 140	0,80 kN
PLU 2G-N DN 150	0,80 kN
PLU 2G-N DN 160	0,80 kN
PLU 2G-N DN 180	0,80 kN
PLU 2G-N DN 200	0,80 kN
PLU 2G-N DN 224	1,00 kN
PLU 2G-N DN 250	1,00 kN
PLU 2G-N DN 280	1,00 kN
PLU 2G-N DN 300	1,00 kN
PLU 2G-N DN 315	1,00 kN

Ducting Clamp PLU 2G-N

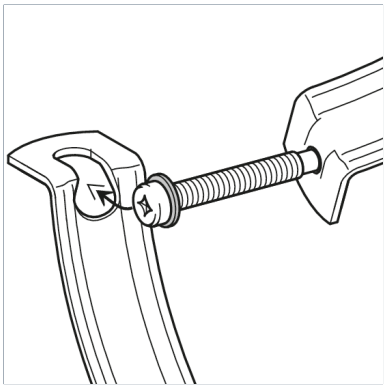

Type	-V{Z,perm.}
PLU 2G-N DN 355	1,00 kN
PLU 2G-N DN 400	1,00 kN
PLU 2G-N DN 450	1,00 kN
PLU 2G-N DN 500	1,00 kN

Types

Type	Size max.	DN	Thread connection	Weight	Quantity	Part number
PLU 2G-N DN 71	78,00 mm	DN 71	M8/M10	0,090 kg/ pcs.	50 pcs.	199626
PLU 2G-N DN 80	87,00 mm	DN 80 (3")	M8/M10	0,098 kg/ pcs.	50 pcs.	199633
PLU 2G-N DN 90	97,00 mm	DN 90 (3 1/2")	M8/M10	0,104 kg/ pcs.	50 pcs.	199640
PLU 2G-N DN 100	108,00 mm	DN 100 (4")	M8/M10	0,112 kg/ pcs.	100 pcs.	199657
PLU 2G-N DN 112	120,00 mm	DN 112	M8/M10	0,120 kg/ pcs.	100 pcs.	199664
PLU 2G-N DN 125	133,00 mm	DN 125 (5")	M8/M10	0,128 kg/ pcs.	100 pcs.	199671
PLU 2G-N DN 140	147,00 mm	DN 140	M8/M10	0,140 kg/ pcs.	80 pcs.	199688
PLU 2G-N DN 150	158,00 mm	DN 150 (6")	M8/M10	0,150 kg/ pcs.	80 pcs.	199695
PLU 2G-N DN 160	170,00 mm	DN 160	M8/M10	0,158 kg/ pcs.	80 pcs.	199701
PLU 2G-N DN 180	190,00 mm	DN 180	M8/M10	0,168 kg/ pcs.	50 pcs.	199718
PLU 2G-N DN 200	208,00 mm	DN 200 (8")	M8/M10	0,180 kg/ pcs.	50 pcs.	199725
PLU 2G-N DN 224	236,00 mm	DN 224	M8/M10	0,240 kg/ pcs.	50 pcs.	199732
PLU 2G-N DN 250	261,00 mm	DN 250 (10")	M8/M10	0,250 kg/ pcs.	40 pcs.	199749
PLU 2G-N DN 280	290,00 mm	DN 280	M8/M10	0,290 kg/ pcs.	40 pcs.	199756
PLU 2G-N DN 300	313,00 mm	DN 300 (12")	M8/M10	0,318 kg/ pcs.	40 pcs.	199763
PLU 2G-N DN 315	328,00 mm	DN 315	M8/M10	0,320 kg/ pcs.	40 pcs.	199770
PLU 2G-N DN 355	368,00 mm	DN 350 (14")	M8/M10	0,370 kg/ pcs.	40 pcs.	199787
PLU 2G-N DN 400	413,00 mm	DN 400 (16")	M8/M10	0,408 kg/ pcs.	30 pcs.	199794

Ducting Clamp PLU 2G-N

Type	Size max.	DN	Thread connection	Weight	Quantity	Part number
PLU 2G-N DN 450	463,00 mm	DN 450 (18")	M8/M10	0,428 kg/ pcs.	20 pcs.	199800
PLU 2G-N DN 500	513,00 mm	DN 500 (20")	M8/M10	0,498 kg/ pcs.	20 pcs.	199817

Dimensions

Type	B1	b1	D	D1	e	H	Mi1	Mi2	t	Ki1	Ki2
PLU 2G-N DN 71	116 mm	20 mm	78 mm	78 mm	99 mm	101 mm	M8	M10	1,5 mm	5,7 mm	11,75 mm
PLU 2G-N DN 80	125 mm	20 mm	87 mm	87 mm	108 mm	110 mm	M8	M10	1,5 mm	5,7 mm	11,75 mm
PLU 2G-N DN 90	135 mm	20 mm	97 mm	97 mm	118 mm	120 mm	M8	M10	1,5 mm	5,7 mm	11,75 mm
PLU 2G-N DN 100	146 mm	20 mm	108 mm	108 mm	129 mm	131 mm	M8	M10	1,5 mm	5,7 mm	11,75 mm
PLU 2G-N DN 112	158 mm	20 mm	120 mm	120 mm	141 mm	143 mm	M8	M10	1,5 mm	5,7 mm	11,75 mm
PLU 2G-N DN 125	171 mm	20 mm	133 mm	133 mm	154 mm	156 mm	M8	M10	1,5 mm	5,7 mm	11,75 mm
PLU 2G-N DN 140	185 mm	20 mm	147 mm	147 mm	168 mm	170 mm	M8	M10	1,5 mm	5,7 mm	11,75 mm
PLU 2G-N DN 150	196 mm	20 mm	158 mm	158 mm	179 mm	181 mm	M8	M10	1,5 mm	5,7 mm	11,75 mm
PLU 2G-N DN 160	208 mm	20 mm	170 mm	170 mm	191 mm	193 mm	M8	M10	1,5 mm	5,7 mm	11,75 mm
PLU 2G-N DN 180	228 mm	20 mm	190 mm	190 mm	211 mm	213 mm	M8	M10	1,5 mm	5,7 mm	11,75 mm
PLU 2G-N DN 200	246 mm	20 mm	208 mm	208 mm	229 mm	231 mm	M8	M10	1,5 mm	5,7 mm	11,75 mm
PLU 2G-N DN 224	274 mm	25 mm	236 mm	236 mm	257 mm	259 mm	M8	M10	1,5 mm	5,7 mm	11,75 mm
PLU 2G-N DN 250	299 mm	25 mm	261 mm	261 mm	282 mm	284 mm	M8	M10	1,5 mm	5,7 mm	11,75 mm
PLU 2G-N DN 280	328 mm	25 mm	290 mm	290 mm	311 mm	313 mm	M8	M10	1,5 mm	5,7 mm	11,75 mm
PLU 2G-N DN 300	351 mm	25 mm	313 mm	313 mm	334 mm	336 mm	M8	M10	1,5 mm	5,7 mm	11,75 mm
PLU 2G-N DN 315	366 mm	25 mm	328 mm	328 mm	349 mm	351 mm	M8	M10	1,5 mm	5,7 mm	11,75 mm
PLU 2G-N DN 355	406 mm	25 mm	368 mm	368 mm	389 mm	391 mm	M8	M10	1,5 mm	5,7 mm	11,75 mm
PLU 2G-N DN 400	451 mm	25 mm	413 mm	413 mm	434 mm	436 mm	M8	M10	1,5 mm	5,7 mm	11,75 mm

Ducting Clamp PLU 2G-N

Type	B1	b1	D	D1	e	H	Mi1	Mi2	t	Ki1	Ki2
PLU 2G-N DN 450	501 mm	25 mm	463 mm	463 mm	484 mm	486 mm	M8	M10	1,5 mm	5,7 mm	11,75 mm
PLU 2G-N DN 500	551 mm	25 mm	513 mm	513 mm	534 mm	536 mm	M8	M10	1,5 mm	5,7 mm	11,75 mm

Certification