Pipe Clamp STABIL I A4

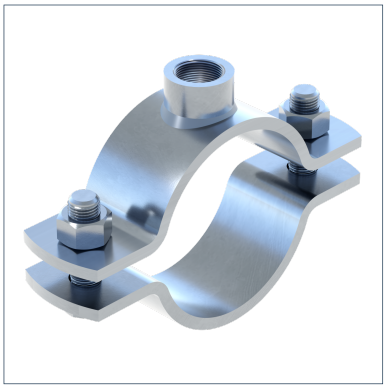

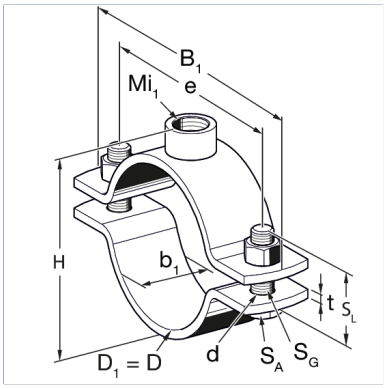

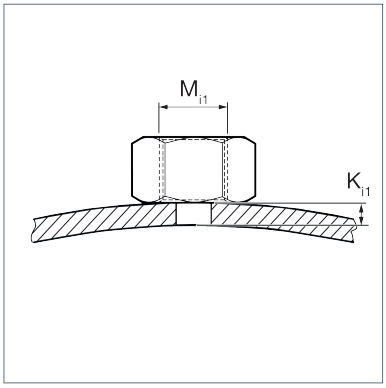

General Information

Heavy pipe clamp for industrial application.

Installation

Suitable for single-point fixing directly with 1/2" threaded tube or connected by respective adapters up to 1" threaded tube.

Material Properties

Halogen-free	0
UV-resistant	0

Material

Primary element material	Stainless Steel A4
Connecting element material	Stainless Steel A4
Corrosion protection class	CRC II – III (C4 – C5 acc. to DIN EN ISO 12944-2)

Forces

Type	-V{Z,perm.}
STABIL I-1/2'' 22 A4	4,70 kN
STABIL I-1/2'' 27 A4	4,70 kN
STABIL I-1/2'' 34 A4	4,70 kN
STABIL I-1/2'' 44 A4	4,70 kN
STABIL I-1/2'' 49 A4	4,70 kN
STABIL I-1/2'' 61 A4	8,00 kN
STABIL I-1/2'' 77 A4	8,00 kN
STABIL I-1/2'' 89 A4	8,00 kN
STABIL I-1/2'' 115 A4	11,00 kN

Types

Type	Size min.	Size max.	DN	Thread connection	Weight	Quantity	Part number
STABIL I-1/2'' 22 A4	18,00 mm	22,00 mm	DN 15 (1/2")	1/2"	0,300 kg/ pcs.	25 pcs.	188228
STABIL I-1/2'' 27 A4	23,00 mm	27,00 mm	DN 20 (3/4")	1/2"	0,320 kg/ pcs.	25 pcs.	188237
STABIL I-1/2'' 34 A4	30,00 mm	34,00 mm	DN 25 (1")	1/2"	0,350 kg/ pcs.	25 pcs.	188246
STABIL I-1/2'' 44 A4	40,00 mm	44,00 mm	DN 32 (1 1/4")	1/2"	0,400 kg/ pcs.	25 pcs.	188255

Pipe Clamp STABIL I A4

Type	Size min.	Size max.	DN	Thread connection	Weight	Quantity	Part number
STABIL I-1/2'' 49 A4	45,00 mm	49,00 mm	DN 40 (1 1/2")	1/2"	0,400 kg/ pcs.	25 pcs.	188264
STABIL I-1/2'' 61 A4	57,00 mm	61,00 mm	DN 50 (2")	1/2"	0,620 kg/ pcs.	25 pcs.	188273
STABIL I-1/2'' 77 A4	72,00 mm	77,00 mm	DN 65 (2 1/2")	1/2"	0,670 kg/ pcs.	25 pcs.	188282
STABIL I-1/2'' 89 A4	84,00 mm	89,00 mm	DN 80 (3")	1/2"	0,750 kg/ pcs.	25 pcs.	188291
STABIL I-1/2'' 115 A4	109,00 mm	115,00 mm	DN 100 (4")	1/2"	1,050 kg/ pcs.	10 pcs.	188300

Dimensions

Type	B1	b1	D	D1	d	e	H	Mi1	SA	SG	SL	t	Ki1
STABIL I-1/2'' 22 A4	86 mm	30 mm	22 mm	22 mm	11 mm	58 mm	47 mm	1/2"	AF16	M10	35 mm	5 mm	5 mm
STABIL I-1/2'' 27 A4	93 mm	30 mm	27 mm	27 mm	11 mm	65 mm	52 mm	1/2"	AF16	M10	35 mm	5 mm	5 mm
STABIL I-1/2'' 34 A4	102 mm	30 mm	34 mm	34 mm	11 mm	74 mm	59 mm	1/2"	AF16	M10	35 mm	5 mm	5 mm
STABIL I-1/2'' 44 A4	114 mm	30 mm	44 mm	44 mm	11 mm	86 mm	69 mm	1/2"	AF16	M10	35 mm	5 mm	5 mm
STABIL I-1/2'' 49 A4	119 mm	30 mm	49 mm	49 mm	11 mm	91 mm	74 mm	1/2"	AF16	M10	35 mm	5 mm	5 mm
STABIL I-1/2'' 61 A4	136 mm	40 mm	61 mm	61 mm	13 mm	103 mm	86 mm	1/2"	AF18	M12	40 mm	5 mm	5 mm
STABIL I-1/2'' 77 A4	152 mm	40 mm	77 mm	77 mm	13 mm	119 mm	102 mm	1/2"	AF18	M12	40 mm	5 mm	5 mm
STABIL I-1/2'' 89 A4	165 mm	40 mm	89 mm	89 mm	13 mm	132 mm	114 mm	1/2"	AF18	M12	40 mm	5 mm	5 mm
STABIL I-1/2'' 115 A4	192 mm	50 mm	115 mm	115 mm	13 mm	159 mm	140 mm	1/2"	AF18	M12	40 mm	5 mm	5 mm

Certification