Acoustic Absorption Element AKE 41 AG/IG

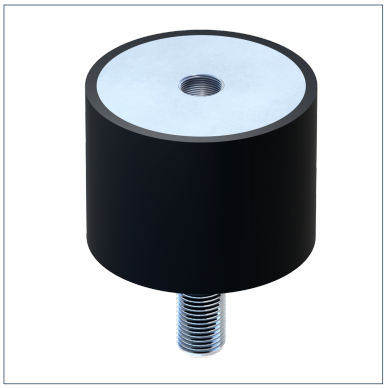

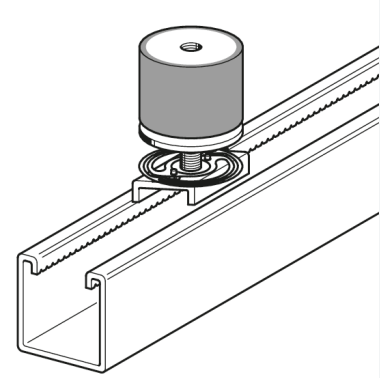

General Information

Universally applicable sound absorption element for higher loads. Suitable for sound-decoupled fastenings for sound insulation requirements, including those specified in DIN 4109. Especially suitable for sound isolation of constructions made of Channels 41 or electrical equipment, e.g. pumps or ventilators.

Installation

Assembly in Channel 41 by means of Washer 8/40 and Speed Nut M8. The Acoustics Element is designed for pressure loads. Installation with dominant tensile loading or shear stress has to be avoided.
For these exceptional cases the load pressure has to be reduced to 1/3.

Mechanical Properties

Min. spring travel	0,5 mm
Max . Spring travel	2,6 mm

Material Properties

Hardness	45 +/-5° Shore
Halogen-free	0
UV-resistant	0

Material

Primary element material	steel
Isolating element material	caoutchouc
Surface finish	electro galvanized (Fe//Zn)
Corrosion protection class	C2

Forces

Type	V{Z,perm.}
AKE 41 AG/IG M 8	0,70 kN

Types

Type	Weight	Quantity	Part number
AKE 41 AG/IG M 8	0,1 kg/pcs.	25 pcs.	193983

Certification