Duo Clamp SRS 2G

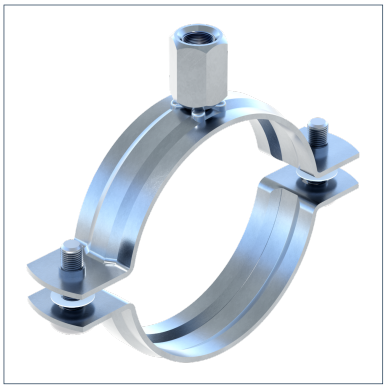

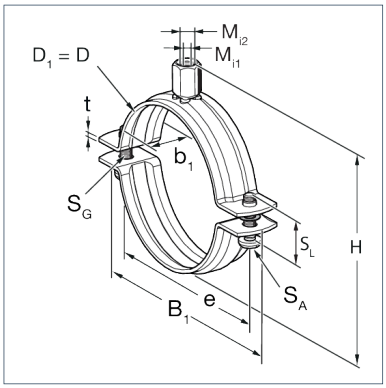

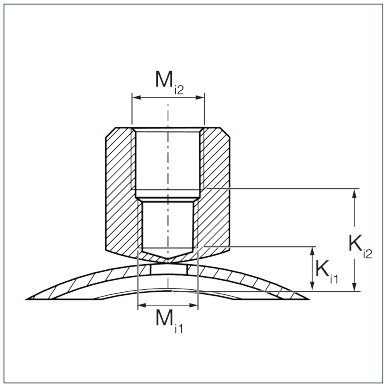

General Information

Two-piece pipe clamp with double thread connection (M8/M10) for the installation of pipelines.

Installation

Tightening torque: 2 Nm

Material Properties

Halogen-free	0
UV-resistant	0

Material

Primary element material	steel
Connecting element material	steel
Surface finish	electro galvanized (Fe//Zn)
Corrosion protection class	C2

Forces

Type	-V{Z,perm.}
SRS 2G 13- 18	0,60 kN
SRS 2G 19 - 22	0,60 kN
SRS 2G 23 - 26	0,60 kN
SRS 2G 27- 30	0,60 kN
SRS 2G 32- 36	0,60 kN
SRS 2G 40- 44	0,60 kN
SRS 2G 48- 54	0,60 kN
SRS 2G 55- 59	0,60 kN
SRS 2G 60- 66	0,60 kN
SRS 2G 68- 73	0,60 kN
SRS 2G 75- 80	2,50 kN
SRS 2G 84- 89	2,50 kN
SRS 2G 90- 98	2,50 kN
SRS 2G 94-101	2,50 kN
SRS 2G 102-108	2,50 kN
SRS 2G 110-115	2,50 kN
SRS 2G 118-125	2,50 kN
SRS 2G 129-136	2,50 kN

Duo Clamp SRS 2G

Type	-V{Z,perm.}
SRS 2G 138-144	2,50 kN
SRS 2G 144-153	2,50 kN
SRS 2G 159-167	2,50 kN

Types

Type	Size min.	Size max.	DN	Weight	Quantity	Part number
SRS 2G 13- 18	13,00 mm	18,00 mm	DN 10 (3/8")	0,045 kg/pcs.	100 pcs.	173216
SRS 2G 19 - 22	19,00 mm	22,00 mm	DN 15 (1/2")	0,047 kg/pcs.	100 pcs.	173225
SRS 2G 23 - 26	23,00 mm	26,00 mm	DN 20 (3/4")	0,049 kg/pcs.	100 pcs.	111470
SRS 2G 27- 30	27,00 mm	30,00 mm	DN 20 (3/4")	0,052 kg/pcs.	100 pcs.	173234
SRS 2G 32- 36	32,00 mm	36,00 mm	DN 25 (1")	0,056 kg/pcs.	100 pcs.	173243
SRS 2G 40- 44	40,00 mm	44,00 mm	DN 32 (1 1/4")	0,063 kg/pcs.	50 pcs.	173252
SRS 2G 48- 54	48,00 mm	54,00 mm	DN 40 (1 1/2")	0,075 kg/pcs.	50 pcs.	173261
SRS 2G 55- 59	55,00 mm	59,00 mm	DN 50 (2")	0,080 kg/pcs.	50 pcs.	182990
SRS 2G 60- 66	60,00 mm	66,00 mm	DN 50 (2")	0,085 kg/pcs.	50 pcs.	173279
SRS 2G 68- 73	68,00 mm	73,00 mm		0,092 kg/pcs.	25 pcs.	173288
SRS 2G 75- 80	75,00 mm	80,00 mm	DN 65 (2 1/2")	0,148 kg/pcs.	25 pcs.	173297
SRS 2G 84- 89	84,00 mm	89,00 mm	DN 80 (3")	0,164 kg/pcs.	25 pcs.	173306
SRS 2G 90- 98	90,00 mm	98,00 mm		0,167 kg/pcs.	25 pcs.	186023
SRS 2G 94-101	94,00 mm	101,00 mm	DN 90 (3 1/2")	0,180 kg/pcs.	25 pcs.	186032
SRS 2G 102-108	102,00 mm	108,00 mm	DN 90 (3 1/2")	0,190 kg/pcs.	25 pcs.	173315
SRS 2G 110-115	110,00 mm	115,00 mm	DN 100 (4")	0,196 kg/pcs.	25 pcs.	173324
SRS 2G 118-125	118,00 mm	125,00 mm		0,250 kg/pcs.	25 pcs.	186041
SRS 2G 129-136	129,00 mm	136,00 mm		0,270 kg/pcs.	25 pcs.	191387
SRS 2G 138-144	138,00 mm	144,00 mm	DN 125 (5")	0,278 kg/pcs.	25 pcs.	191396
SRS 2G 144-153	144,00 mm	153,00 mm		0,291 kg/pcs.	25 pcs.	191405
SRS 2G 159-167	159,00 mm	167,00 mm	DN 150 (6")	0,312 kg/pcs.	25 pcs.	191414

Dimensions

Type	B1	b1	D	D1	e	H	Mi1	Mi2	SA	SG	SL	t	Ki1	Ki2
SRS 2G 13- 18	52,5 mm	20 mm	17 mm	17 mm	37,5 mm	41,5 mm	M8	M10	slot with Philips	M5	15 mm	1,5 mm	3,89 mm	12,53 mm
SRS 2G 19 - 22	54,5 mm	20 mm	22 mm	22 mm	39,5 mm	46,5 mm	M8	M10	slot with Philips	M5	15 mm	1,5 mm	3,89 mm	12,53 mm

Duo Clamp SRS 2G

Type	B1	b1	D	D1	e	H	Mi1	Mi2	SA	SG	SL	t	Ki1	Ki2
SRS 2G 23 - 26	58,5 mm	20 mm	26 mm	26 mm	43,5 mm	50,5 mm	M8	M10	slot with Philips	M5	15 mm	1,5 mm	3,89 mm	12,53 mm
SRS 2G 27- 30	62,5 mm	20 mm	30 mm	30 mm	47,5 mm	54,5 mm	M8	M10	slot with Philips	M5	15 mm	1,5 mm	3,89 mm	12,53 mm
SRS 2G 32- 36	68,5 mm	20 mm	36 mm	36 mm	53,5 mm	60,5 mm	M8	M10	slot with Philips	M5	15 mm	1,5 mm	3,89 mm	12,53 mm
SRS 2G 40- 44	76 mm	20 mm	44 mm	44 mm	61 mm	68,5 mm	M8	M10	slot with Philips	M5	15 mm	1,5 mm	3,89 mm	12,53 mm
SRS 2G 48- 54	91,5 mm	20 mm	52 mm	52 mm	74,5 mm	76,5 mm	M8	M10	slot with Philips	M6	20 mm	1,5 mm	3,89 mm	12,53 mm
SRS 2G 55- 59	99 mm	20 mm	60 mm	60 mm	82 mm	84,5 mm	M8	M10	slot with Philips	M6	20 mm	1,5 mm	3,89 mm	12,53 mm
SRS 2G 60- 66	105 mm	20 mm	66 mm	66 mm	88 mm	90,5 mm	M8	M10	slot with Philips	M6	20 mm	1,5 mm	3,89 mm	12,53 mm
SRS 2G 68- 73	112 mm	20 mm	72 mm	72 mm	95 mm	96,5 mm	M8	M10	slot with Philips	M6	20 mm	1,5 mm	3,89 mm	12,53 mm
SRS 2G 75- 80	125 mm	25 mm	80 mm	80 mm	105 mm	106,5 mm	M8	M10	slot with Philips	M6	25 mm	2 mm	5,5 mm	14,67 mm
SRS 2G 84- 89	134 mm	25 mm	88 mm	88 mm	114 mm	114,5 mm	M8	M10	slot with Philips	M6	25 mm	2 mm	5,5 mm	14,67 mm
SRS 2G 90- 98	141 mm	25 mm	97 mm	97 mm	121 mm	123,5 mm	M8	M10	slot with Philips	M6	25 mm	2 mm	5,5 mm	14,67 mm
SRS 2G 94-101	146,5 mm	25 mm	99 mm	99 mm	126,5 mm	125,5 mm	M8	M10	slot with Philips	M6	25 mm	2 mm	5,5 mm	14,67 mm
SRS 2G 102-108	151 mm	25 mm	107 mm	107 mm	131 mm	133,5 mm	M8	M10	slot with Philips	M6	25 mm	2 mm	5,5 mm	14,67 mm
SRS 2G 110-115	159,5 mm	25 mm	115 mm	115 mm	139,5 mm	141,5 mm	M8	M10	slot with Philips	M6	25 mm	2 mm	5,5 mm	14,67 mm
SRS 2G 118-125	173 mm	25 mm	124 mm	124 mm	153 mm	152,5 mm	M8	M10	slot with Philips	M6	30 mm	2,5 mm	6,61 mm	14,33 mm
SRS 2G 129-136	186 mm	25 mm	137 mm	137 mm	166 mm	165,5 mm	M8	M10	slot with Philips	M6	30 mm	2,5 mm	6,61 mm	14,33 mm

Duo Clamp SRS 2G

Type	B1	b1	D	D1	e	H	Mi1	Mi2	SA	SG	SL	t	Ki1	Ki2
SRS 2G 138-144	193 mm	25 mm	143 mm	143 mm	173 mm	171,5 mm	M8	M10	slot with Philips	M6	30 mm	2,5 mm	6,61 mm	14,33 mm
SRS 2G 144-153	203 mm	25 mm	153 mm	153 mm	183 mm	181,5 mm	M8	M10	slot with Philips	M6	30 mm	2,5 mm	6,61 mm	14,33 mm
SRS 2G 159-167	215 mm	25 mm	166 mm	166 mm	195 mm	194,5 mm	M8	M10	slot with Philips	M6	40 mm	2,5 mm	6,61 mm	14,33 mm

Certification