Pipe Clamp STABIL D-M16 ME

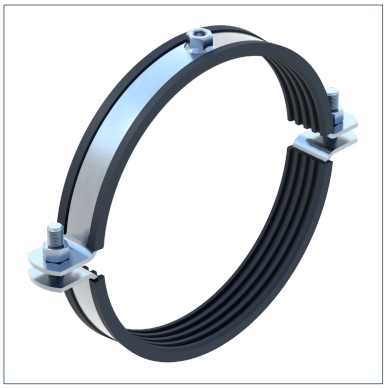

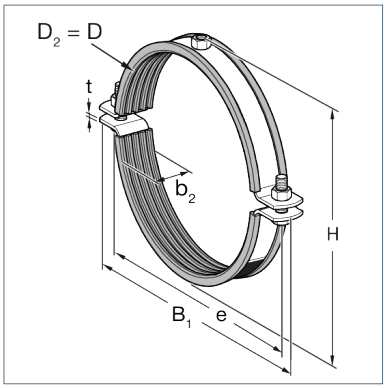

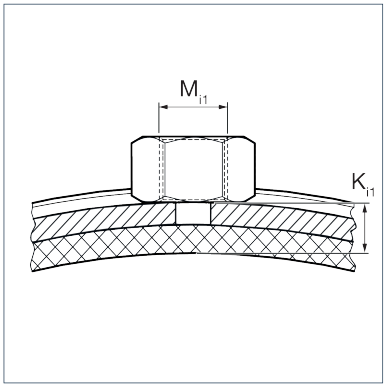

General Information

For soundproof installation of pipes in M&E services and plant construction.

Installation

Tightening torque: 20 Nm

Material Properties

Halogen-free	0
UV-resistant	0

Material

Primary element material	steel
Isolating element material	SBR/EPDM
Connecting element material	steel
Surface finish	electro galvanized (Fe//Zn)
Corrosion protection class	C2

Forces

Type	-V{Z,perm.}
STABIL D-M16 ME 320-326	9,00 kN
STABIL D-M16 ME 345-356	9,00 kN
STABIL D-M16 ME 359-368	9,00 kN
STABIL D-M16 ME 398-407	9,00 kN
STABIL D-M16 ME 410-419	15,00 kN
STABIL D-M16 ME 498-508	15,00 kN
STABIL D-M16 ME 512-521	15,00 kN

Note on loadings

The recommended load is calculated using specific statistical methods relating to break load and is designed to restrict deflection to 1.5 mm or 2 % of the maximum applicable clamping diameter.

Types

Type	Size min.	Size max.	DN	Thread connection	Weight	Quantity	Part number
STABIL D-M16 ME 320-326	320,00 mm	326,00 mm	DN 300 (12")	M16	3,130 kg/ pcs.	1 pcs.	103987
STABIL D-M16 ME 345-356	345,00 mm	356,00 mm	DN 350 (14")	M16	3,262 kg/ pcs.	1 pcs.	103996

Pipe Clamp STABIL D-M16 ME

Type	Size min.	Size max.	DN	Thread connection	Weight	Quantity	Part number
STABIL D-M16 ME 359-368	359,00 mm	368,00 mm		M16	3,571 kg/pcs.	1 pcs.	104003
STABIL D-M16 ME 398-407	398,00 mm	407,00 mm	DN 400 (16")	M16	3,655 kg/pcs.	1 pcs.	104012
STABIL D-M16 ME 410-419	410,00 mm	419,00 mm		M16	5,946 kg/pcs.	1 pcs.	104021
STABIL D-M16 ME 498-508	498,00 mm	508,00 mm	DN 500 (20")	M16	6,965 kg/pcs.	1 pcs.	104030
STABIL D-M16 ME 512-521	512,00 mm	521,00 mm		M16	7,430 kg/pcs.	1 pcs.	104049

Dimensions

Type	B1	b2	D	D2	e	H	t	Ki1
STABIL D-M16 ME 320-326	454 mm	56 mm	326 mm	326 mm	404 mm	364 mm	5 mm	12,39 mm
STABIL D-M16 ME 345-356	482 mm	56 mm	356 mm	356 mm	432 mm	394 mm	5 mm	12,39 mm
STABIL D-M16 ME 359-368	496 mm	56 mm	368 mm	368 mm	446 mm	408 mm	5 mm	12,39 mm
STABIL D-M16 ME 398-407	534 mm	56 mm	407 mm	407 mm	484 mm	447 mm	5 mm	12,39 mm
STABIL D-M16 ME 410-419	546 mm	76 mm	419 mm	419 mm	496 mm	462 mm	6 mm	13,39 mm
STABIL D-M16 ME 498-508	631 mm	76 mm	508 mm	508 mm	581 mm	550 mm	6 mm	13,39 mm
STABIL D-M16 ME 512-521	645 mm	76 mm	521 mm	521 mm	595 mm	564 mm	6 mm	13,39 mm

Certification