Slide Set GS 2G A4

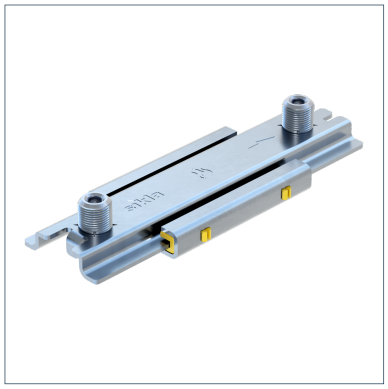

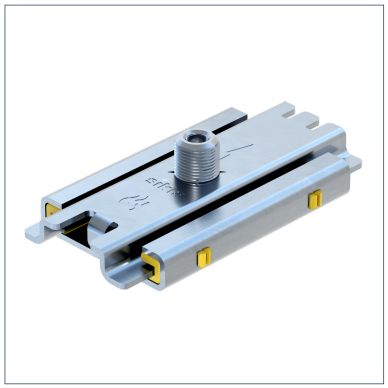

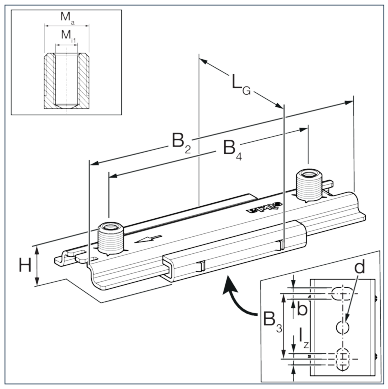

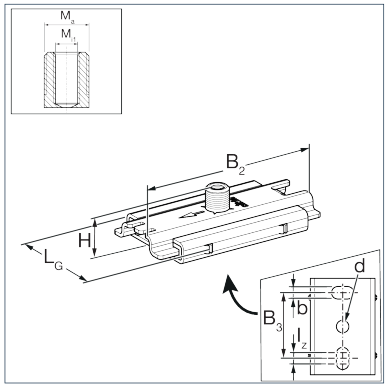

General Information

Slide Set for single and double mounting of mechanical equipment. To be used preferably in combination with Sikla Pipe Clamps Stabil D-2G ss. Various connection options with these pipe clamps ranging between M10 and R1' using adapters (see Adapters AD f/f ss) Sound absorption by means of slide rails of glass fibre reinforced PA.

Installation

Max. sliding distance Type 2G: 85 mm
Max. sliding distance Type 2G2: 140 mm

Temperature

Permissible long-term temperature	130 °C

Mechanical Properties

Static friction µ0	0,18

Material Properties

Halogen-free	0
UV-resistant	0

Material

Primary element material	Stainless Steel A4
Sliding element material	PA
Corrosion protection class	CRC II – III (C4 – C5 acc. to DIN EN ISO 12944-2)

Forces

Type	-V{Z,perm.}	V{Z,perm.}
GS 2G A4	0,60 kN	1,20 kN
GS 2G2 A4	0,60 kN	1,20 kN

Types

Type	Max. lever arm	Max. slide path	Thread connection	Weight	Quantity	Part number
GS 2G A4	250,00 mm	85,00 mm	M10/M16	0,380 kg/pcs.	25 pcs.	170161
GS 2G2 A4	150,00 mm	140,00 mm	M10/M16	0,498 kg/pcs.	25 pcs.	170189

Dimensions

Type	b	B2	B3	B4	d	H	LG	Iz	Mi1	Ma
GS 2G A4	13 mm	130 mm	68 mm		13 mm	35 mm	71 mm	10 mm	M10	M16

Slide Set GS 2G A4

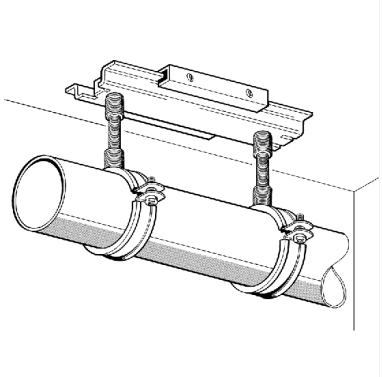

Type	b	B2	B3	B4	d	H	LG	lz	Mi1	Ma
GS 2G2 A4	13 mm	200 mm	68 mm	150 mm	13 mm	35 mm	71 mm	10 mm	M10	M16

Certification

Documents

Installation - Slide Set GS 2G