Sound Absorber SDE 2 FP



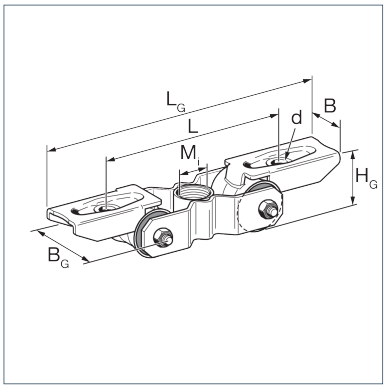

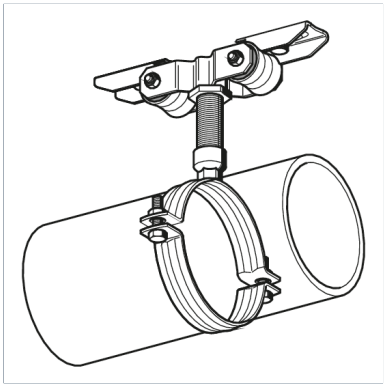

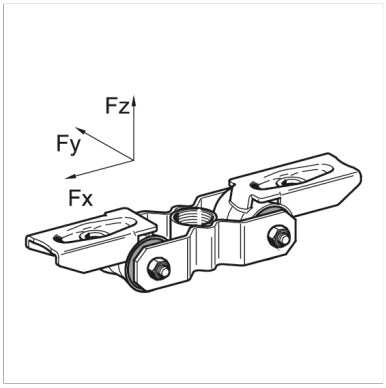

General Information

Universal sound absorption element for heavy loads. Particularly suitable for soundproof installation according to DIN 4109 of single point connections to threaded tubes up to 1' as a base for soundproof fixed points. Can be fixed either directly to building components by means of two M16 heavy duty anchors or to steel structures, or onto Sikla Channels (recommended from size 41/45).

Installation

For soundproof single point installations and for fixed points we recommend to connect the SDE 2-FP 1 to the centric thread connection of the Stabil D-3G.
When using the 1' thread of the clamp, a 1' Locking Nut has to be used.
For mounting on Sikla channels, profiles from type 41/45 are recommended.

Temperature

Max. temperature	100 °C
Min. temperature	-30 °C

Mechanical Properties

Insertion isolation	15 dB(A)

Material Properties

Halogen-free	0
UV-resistant	0

Material

Primary element material	steel
Isolating element material	PUR
Surface finish	electro galvanized (Fe//Zn)
Corrosion protection class	C2

Forces

Type	-V{X,perm.}	V{X,perm.}	-V{Z,perm.}	V{Z,perm.}
SDE 2-FP 1	20,00 kN	20,00 kN	20,00 kN	20,00 kN

Note on loadings

Lateral forces require additional support.
Dimensioning of the anchor and of further joining elements has to be taken into consideration.
In fixed point constructions as shown in the picture below, the fixed point force is limited by the permissible bending moment of the threaded tube. (For load chart see "Installation Guideline").

Sound Absorber SDE 2 FP

Types

Type	Weight	Quantity	Part number
SDE 2-FP 1	2,067 kg/pcs.	10 pcs.	161071

Dimensions

Type	B	BG	d	HG	L	LG	Mi
SDE 2-FP 1	50 mm	86,4 mm	16,5 mm	58,5 mm	205 mm	315 mm	1"

Certification