Slide Element GLE J

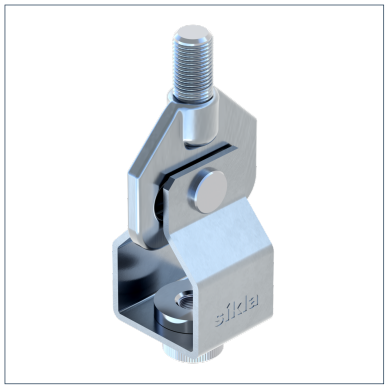

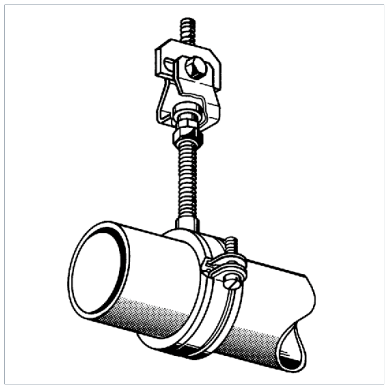

General Information

Height-adjustable suspension slide element for all mechanical services. Can be fixed as a single mounting element directly to the ceiling or, in case of parallel pipe runs, to Sikla Channels. The slide roller located in the suspended section provides for smooth, jerk-free and silent sliding.

Installation

The selected height is to be secured by means of a locking nut.
Max. lateral deviation from the axis of glide: 10°C
Length of drop rod of threaded rod: No limitation
Maximum sliding distance: 25 mm
Maximum height adjustment: 15 mm

Material Properties

Halogen-free	0
UV-resistant	0

Material

Corrosion protection class	C2

Forces

Type	-V{Z,perm.}
GLE J 8	3,50 kN
GLE J 10	3,50 kN
GLE J 12	6,00 kN
GLE J 16	6,00 kN

Note on loadings

The load capacity of the connecting parts used is to be considered. This applies particularly under stress of fire.

Fire resistance

Type	Fire Resistance 30 min	Fire Resistance 60 min	Fire Resistance 90 min	Fire Resistance 120 min
GLE J 10	1,1 kN	0,6 kN	0,4 kN	0,3 kN
GLE J 12	1,3 kN	1 kN	0,5 kN	0,3 kN
GLE J 16	1,3 kN	1 kN	0,5 kN	0,3 kN

Slide Element GLE J

Types

Type	Max. slide path	Weight	Quantity	Part number
GLE J 8	25,00 mm	0,199 kg/pcs.	25 pcs.	126852
GLE J 10	25,00 mm	0,196 kg/pcs.	25 pcs.	126861
GLE J 12	25,00 mm	0,3 kg/pcs.	25 pcs.	126870
GLE J 16	25,00 mm	0,285 kg/pcs.	25 pcs.	126889

Dimensions

Type	B1	B2	H	H1	L	Ma	Mi1
GLE J 8	30 mm	55 mm	90 mm	22 mm	25 mm	M8	M8
GLE J 10	30 mm	55 mm	90 mm	22 mm	25 mm	M10	M10
GLE J 12	35 mm	55 mm	95 mm	22 mm	40 mm	M12	M12
GLE J 16	35 mm	55 mm	95 mm	22 mm	40 mm	M12	M16

Certification