Slide Set GS H3G ULTRAGLIDE

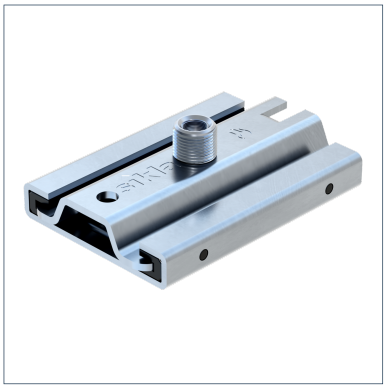

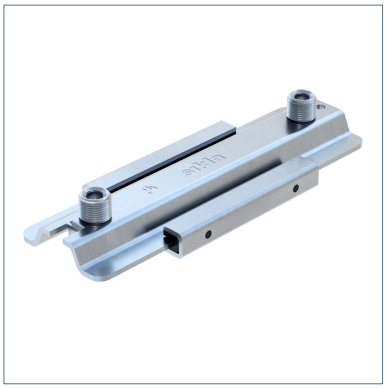

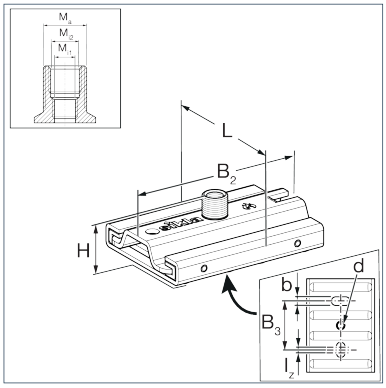

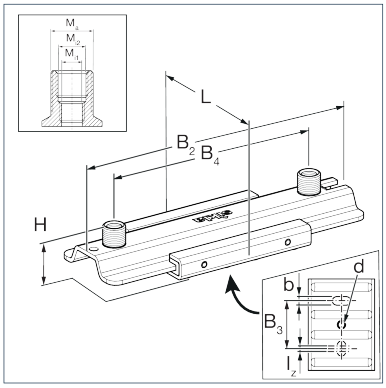

General Information

Heavy-duty Slide Set for plant construction. To be used preferably in combination with Sikla Pipe Clamp Stabil D-3G and Chilled Water Clamp SKS Top-2C. Various connection options of the pipe clamps depending on the respective load: M12, M16 or with 1/2' adapters using the external thread (see Adapter AD f/f). Sound absorption by means of glass fibre reinforced polyamide slide rails. Especially suitable for ceiling and floor mounting solutions and as a guide for rising pipes. When using the version ULTRAglide the resultant shear force is halved. By this the realisation of optimized supporting structures is possible. For wall mounting, we recommend the use of the Slide Set H3G on Sikla Support Bracket.

Installation

For pipes of DN 100 or larger having to be spaced at a distance from the Slide Set, or under conditions of reversed bending stress, the 3G triple thread nuts are to be secured by screwing on a 1/2' Locking Nut.

Temperature

Permissible long-term temperature	130 °C

Mechanical Properties

Static friction µ0	0,07

Material Properties

Halogen-free	0
UV-resistant	0

Material

Primary element material	steel
Sliding element material	PA GF Nano-coated
Surface finish	electro galvanized (Fe//Zn)
Corrosion protection class	C2

Forces

Type	-V{Z,perm.}	V{Z,perm.}
GS ULTRAGLIDE H3G	5,00 kN	9,00 kN
GS ULTRAGLIDE H3G2	5,00 kN	9,00 kN

Moments

Type	M{X,perm.}
GS ULTRAGLIDE H3G2	0,35 kNm

Slide Set GS H3G ULTRAGLIDE

Note on loadings

The permissible bending moment of the connecting element (threaded rod or threaded tube) may restrict the application!

Fire resistance

Type	Fire Resistance 30 min	Fire Resistance 60 min	Fire Resistance 90 min	Fire Resistance 120 min
GS ULTRAGLIDE H3G	1 kN	0,54 kN	0,36 kN	0,26 kN
GS ULTRAGLIDE H3G2	1 kN	0,54 kN	0,36 kN	0,26 kN

Types

Type	Max. lever arm	Max. slide path	Thread connection	Weight	Quantity	Part number
GS ULTRAGLIDE H3G	400,00 mm	100,00 mm	M12/M16/1/2"	1,161 kg/ pcs.	10 pcs.	110586
GS ULTRAGLIDE H3G2	400,00 mm	135,00 mm	M12/M16/1/2"	1,581 kg/ pcs.	10 pcs.	110588

Dimensions

Type	B2	B3	B4	b	d	H	L	lz	Ma	Mi1	Mi2
GS ULTRAGLIDE H3G	150 mm	73 mm		13 mm	13 mm	49,5 mm	102 mm	10 mm	1/2"	M12	M16
GS ULTRAGLIDE H3G2	275 mm	73 mm	210 mm	13 mm	13 mm	49,5 mm	102 mm	10 mm	1/2"	M12	M16

Certification

Documents

Installation - Slide Set GS H3G