Height Adjuster HRS 0

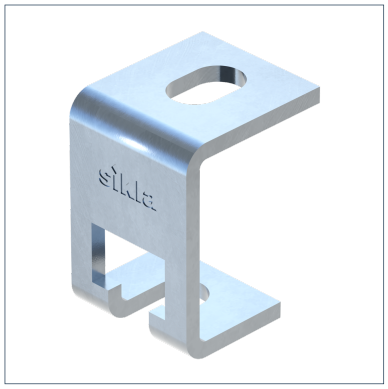

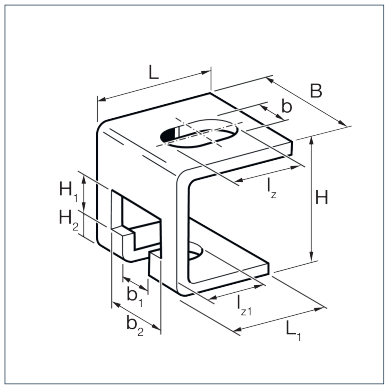

General Information

Height adjustment unit for suspended pipelines and components, providing for accurate pipe laying and compensation of constructional building tolerances. Facilitates mounting and improves mounting efficiency on site.

Installation

Connection to building structure: M12
Connection to system: M10 and M12
Adjustment range: 25 mm

Material Properties

Halogen-free	0
UV-resistant	0

Material

Primary element material	steel
Connecting element material	steel
Surface finish	electro galvanized (Fe//Zn)
Corrosion protection class	C2

Forces

Type	-V{Z,perm.}
HRS 0	1,50 kN

Types

Type	Weight	Quantity	Part number
HRS 0	0,095 kg/pcs.	50 pcs.	125958

Dimensions

Type	B	b	b1	b2	H	H1	H2	L	L1	lz	lz1
HRS 0	35,5 mm	12,5 mm	12,5 mm	22,5 mm	53 mm	15 mm	9 mm	40,5 mm	29 mm	19,5 mm	22,25 mm

Certification