Ducting Angle LUW SL

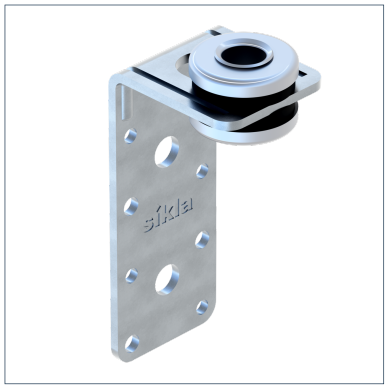

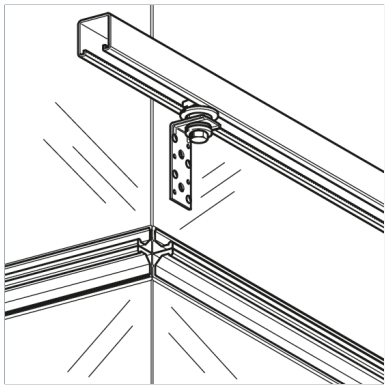

General Information

Mounting element for rectangular ducts installed directly under the ceiling, or for suspended installation when using a threaded rod. Types SL and SZ allow for soundproof installation, also according to DIN 4109. The adjustability in the oblong hole qualifies the adjustment of bore variations and building tolerances. For assembly on ducts with channels and T-head Bolts it guarantees the adequate distance in order to avoid structure borne sound when using versions SL and SZ.

Installation

Fixing to duct with rivets (ø 4 - 5 mm), sheet metal screws (ø 4 - 5 mm) or M8 bolts.
When the bracket is mounted in a vertical position (under compressive load), use the holes closest to a 90° angle. When fastening with an M8 bolt, also use an 8/40 washer.
Adjustable range: 13 mm
Connection to building structure: M8/M10

Temperature

Max. temperature	110 °C
Min. temperature	-50 °C

Mechanical Properties

Insertion isolation	8,7 dB(A)

Material Properties

Hardness	45+ / -5° Shore
Halogen-free	0
UV-resistant	0

Material

Primary element material	steel
Isolating element material	EPDM
Surface finish	electro galvanized (Fe//Zn)
Corrosion protection class	C2

Forces

Type	-V{Z,perm.}
LUW SL	0,80 kN

Types

Type	Weight	Quantity	Part number
LUW SL	0,092 kg/pcs.	100 pcs.	189893

Ducting Angle LUW SL

Dimensions

Type	B	d	d1	d2	d3	H	H1	H2	H3	L	L1
LUW SL	35 mm	8,5 mm	10,6 mm	4,2 mm	5 mm	85 mm	18,5 mm	29,5 mm	20 mm	41 mm	18,75 mm

Certification