Clamping Set SPZ HCP

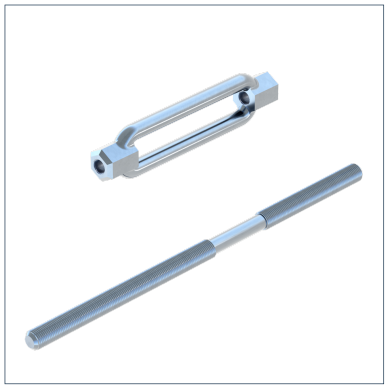

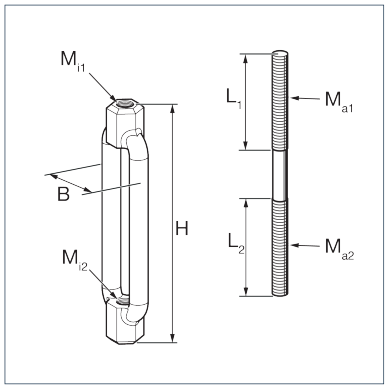

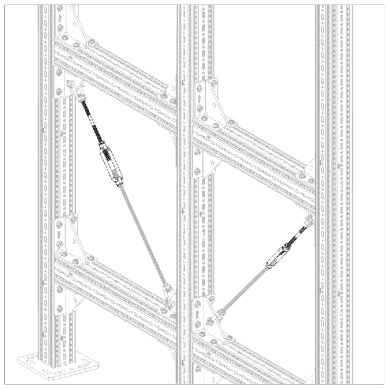

General Information

Clamping Set for construction of bracings and wind bracings e.g. in the system siFramo as tie rod to transfer loads/influences.

Installation

The connection to the reinforcing component is made on one side of the turnbuckle with the threaded rod and on the other side with the tie rod. Connection to the structure is done by the Threaded Clevis GWB.

Material Properties

Halogen-free	0
UV-resistant	0

Material

Primary element material	steel
Surface finish	HCP
Corrosion protection class	C4

Forces

Type	-V{Z,perm.}
SPZ M10 HCP	11,50 kN
SPZ M12 HCP	15,00 kN
SPZ M16 HCP	23,50 kN

Types

Type	Weight	Quantity	Part number
SPZ M10 HCP	0,288 kg/pcs.	10 pcs.	116573
SPZ M12 HCP	0,374 kg/pcs.	10 pcs.	116574
SPZ M16 HCP	0,690 kg/pcs.	10 pcs.	116575

Dimensions

Type	B	H	L1	L2	Mi1	Mi2	Ma1	Ma2
SPZ M10 HCP	30 mm	125 mm	80 mm	130 mm	M10-LH	M10	M10	M10-LH
SPZ M12 HCP	34 mm	125 mm	80 mm	130 mm	M12-LH	M12	M12	M12-LH
SPZ M16 HCP	42 mm	150 mm	80 mm	130 mm	M16-LH	M16	M16	M16-LH

Certification