Cable Holder KHP

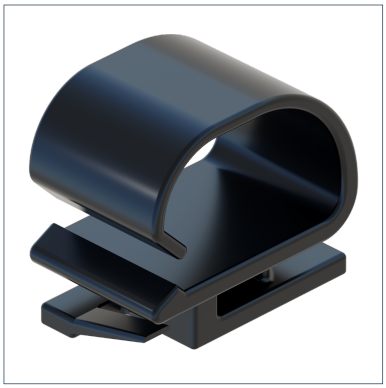

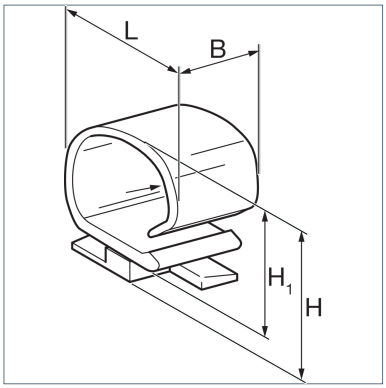

General Information

Clip for connecting cables up to a diameter of 16mm to PV mounting systems. Suitable to slot into the back of all Channels MS 41 with min. profile thickness of 2mm.

Installation

The cable holder is locked by a simple 90 degree right turn in the elongated holes of the mounting rail.

Material Properties

Halogen-free	0
UV-resistant	0

Material

Primary element material	PA

Types

Type	Weight	Quantity	Part number
KHP	0,002 kg/pcs.	500 pcs.	110879

Dimensions

Type	B	H	H1	L
KHP	15 mm	21,4 mm	16,3 mm	24 mm