Height Adjuster HRS P

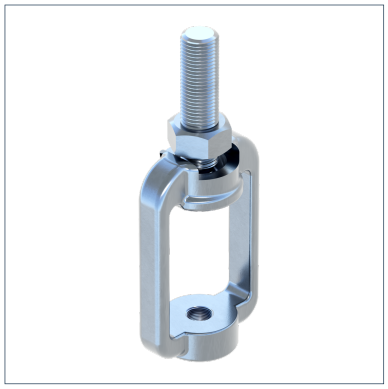

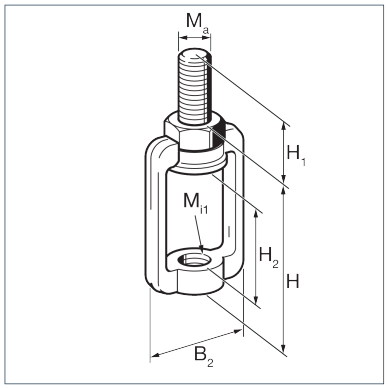

General Information

Suitable for all M&E services. May be fixed directly to the ceiling (anchor) or in a suitable channel. Especially advantageous due to the suspension unit in the upper section of the height adjuster, since it enables the pipes to move in all directions.

Installation

The upper part of the base component can be used as a tool for screwing in the suspending bolt. Then the bolt only has to be tightened with an open-ended spanner. After mounting, the base component rests freely mobile and rotatable on the rounded bolt head. Fixing a locking nut against the cup nut secures the height adjusted.

Max. swinging angle: 7°

Connections:

Type	Connection to system	Connection to building structure
P M8	M8	M8 x 22
P M10	M10	M10 x 22

Material Properties

Halogen-free	0
UV-resistant	0

Material

Primary element material	cast steel
Connecting element material	steel
Surface finish	electro galvanized (Fe//Zn)
Corrosion protection class	C2

Forces

Type	-V{Z,perm.}
HRS P M 8	4,00 kN
HRS P M10	4,00 kN

Types

Type	Weight	Quantity	Part number
HRS P M 8	0,065 kg/pcs.	25 pcs.	151519
HRS P M10	0,078 kg/pcs.	25 pcs.	151528

Dimensions

Type	B2	H	H1	H2	Mi1	Ma
HRS P M 8	33 mm	59 mm	22 mm	32,5 mm	M8	M8

Height Adjuster HRS P

Type	B2	H	H1	H2	Mi1	Ma
HRS P M10	33 mm	62 mm	22 mm	32,5 mm	M10	M10

Certification