Link Eye SCB RH

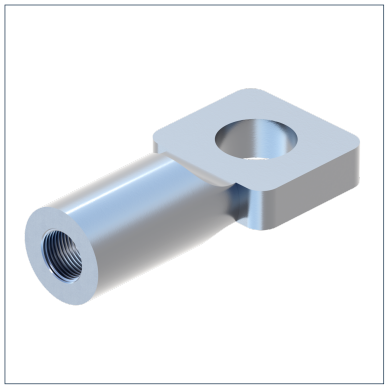

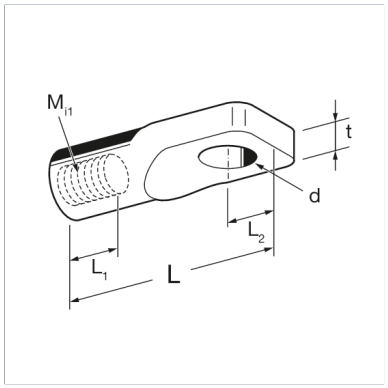

General Information

For connecting the Stabil D-A pipe clamp via its clamp tabs and for adjusting threaded rods.

Material Properties

Halogen-free	0
UV-resistant	0

Material

Primary element material	steel
Surface finish	electro galvanized (Fe//Zn)
Corrosion protection class	C2

Forces

Type	-V{Z,perm.}
SCB RH M 8	5,00 kN
SCB RH M10	7,00 kN
SCB RH M12	9,00 kN

Types

Type	Weight	Quantity	Part number
SCB RH M 8	0,032 kg/pcs.	100 pcs.	124221
SCB RH M10	0,045 kg/pcs.	100 pcs.	124203
SCB RH M12	0,072 kg/pcs.	100 pcs.	150916

Dimensions

Type	d	L	L1	L2	Mi1	t
SCB RH M 8	11 mm	46,5 mm	13 mm	11 mm	M8	5,5 mm
SCB RH M10	12 mm	50,5 mm	13 mm	11 mm	M10	6,5 mm
SCB RH M12	13 mm	56,1 mm	13 mm	11 mm	M12	7,5 mm

Certification

Satifies the VdS standards.