Sign with Groove Company Logo LOGN FE

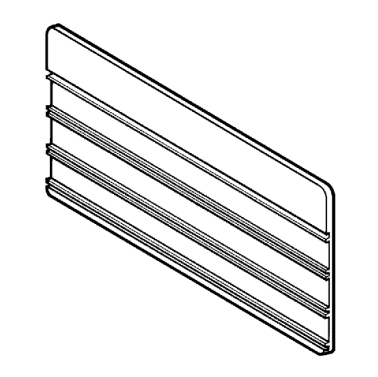

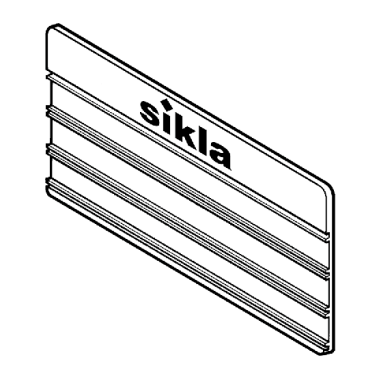

General Information

Simply put Sign plates equipped with Inserts SLT or Blank Inserts SLL into the clear plastic cover. There is no need to adjust or fix them extra. The Signs are compatible with all Holders. Size 50 x 100 mm.

Installation

The Signs could be printed with your company logo and text according to your specifications.

Note: For first-time orders we need a digital company logo that meets the following requirements:
Size: 100 mm x 13,5 mm, at least 240 dpi, png-file (transparent background)
Color space: RGB oder CMYK

Material Properties

Halogen-free	0
UV-resistant	0

Additional information

Delivery time: 10 business days

Types

Type	Colour	Weight	Quantity	Part number
LOGN FE BLUE	RAL 5005 blue	0,01 kg/pcs.	1 pcs.	110800
LOGN FE BROWN	RAL 8002 brown	0,01 kg/pcs.	1 pcs.	110803
LOGN FE YELLOW	RAL 1003 yellow	0,01 kg/pcs.	1 pcs.	110797
LOGN FE GREY	RAL 7035 grey	0,01 kg/pcs.	1 pcs.	110802
LOGN FE GREEN	RAL 6018 yellowgreen	0,01 kg/pcs.	1 pcs.	110801
LOGN FE ORANGE	RAL 2003 orange	0,01 kg/pcs.	1 pcs.	110798
LOGN FE RED	RAL 3000 firered	0,01 kg/pcs.	1 pcs.	110799
LOGN FE WHITE	RAL 9016 white	0,01 kg/pcs.	1 pcs.	110796