# Grooved Pin PNS

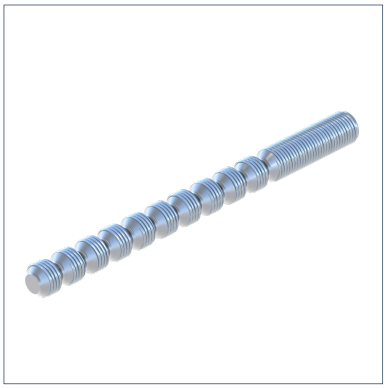

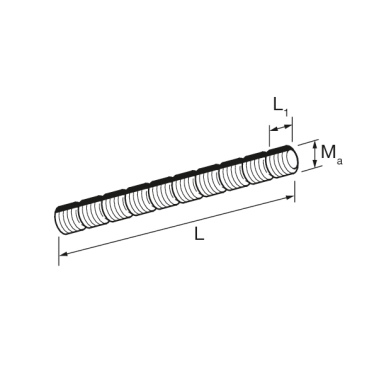


## General Information

In conjunction with the Pressix CC quick-assembly systems or individually usable threaded pins with grooves, which eliminate time-consuming cutting tasks (sawing and re-cutting the threads). The grooved pin is cut in a groove using the PBC bolt cutter without damaging the thread.

## Installation

| Type | permissible tightening torque [kN] |
|---|---|
| M8 | 10 |
| M10 | 15 |

## Material Properties

| | |
|---|---|
| Halogen-free | 0 |
| UV-resistant | 0 |

## Material

| | |
|---|---|
| Primary element material | steel |
| Surface finish | electro galvanized (Fe//Zn) |
| Corrosion protection class | C2 |

## Forces

| Type | -V{Z,perm.} |
|---|---|
| GES PNS M 8 1M | 3,30 kN |
| GES PNS M10 1M | 4,50 kN |

## Types

| Type | L | Weight | Quantity | Part number |
|---|---|---|---|---|
| GES PNS M 8 1M | 1.000 mm | 0,281 kg/pcs. | 1 pcs. | 157755 |
| GES PNS M10 1M | 1.000 mm | 0,500 kg/pcs. | 1 pcs. | 157773 |

## Dimensions

| Type | L | L1 | Ma |
|---|---|---|---|
| GES PNS M 8 1M | 1.000 mm | 10 mm | M 8 |
| GES PNS M10 1M | 1.000 mm | 10 mm | M10 |

## Certification