Screw Pin BOL

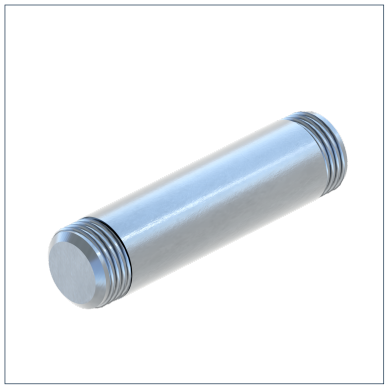

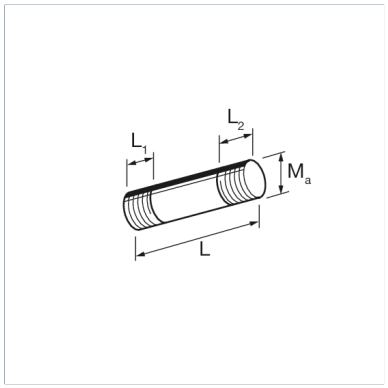

General Information

For pipe installation with double support plates DHP to ensure a constant wall clearance for the pipe.

Material Properties

Halogen-free	0
UV-resistant	0

Material

Primary element material	steel
Surface finish	electro galvanized (Fe//Zn)
Corrosion protection class	C2

Types

Type	Weight	Quantity	Part number
BOL M8 12	0,003 kg/pcs.	100 pcs.	124586
BOL M8 30	0,009 kg/pcs.	100 pcs.	124887
BOL M8 40	0,012 kg/pcs.	100 pcs.	124896
BOL M8 50	0,016 kg/pcs.	100 pcs.	153681
BOL M8 75	0,029 kg/pcs.	100 pcs.	112913

Dimensions

Type	L	L1	L2	Ma
BOL M8 12	12 mm	4,5 mm	4,5 mm	M8
BOL M8 30	30 mm	10 mm	4,5 mm	M8
BOL M8 40	40 mm	20 mm	4,5 mm	M8
BOL M8 50	50 mm	30 mm	4,5 mm	M8
BOL M8 75	75 mm	30 mm	4,5 mm	M8

Certification