Eye Screw SCR LL



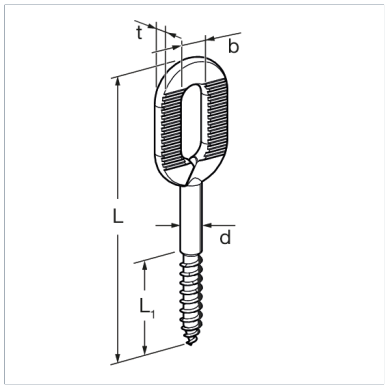

General Information

For attaching perforated tape to wooden building materials.

Material Properties

Halogen-free	0
UV-resistant	0

Material

Primary element material	steel
Surface finish	electro galvanized (Fe//Zn)
Corrosion protection class	C2

Types

Type	L	Weight	Quantity	Part number
SCR LL H 6x 50 MM	50,00 mm	0,023 kg/pcs.	100 pcs.	124249
SCR LL H 8x 50 MM	50,00 mm	0,039 kg/pcs.	100 pcs.	124258

Dimensions

Type	b	d	L	L1	t
SCR LL H 6x 50 MM	8 mm	6 mm	80 mm	30 mm	4 mm
SCR LL H 8x 50 MM	9 mm	7 mm	100 mm	33 mm	4 mm

Certification