Round Rod Coupling AD IG/IG A4

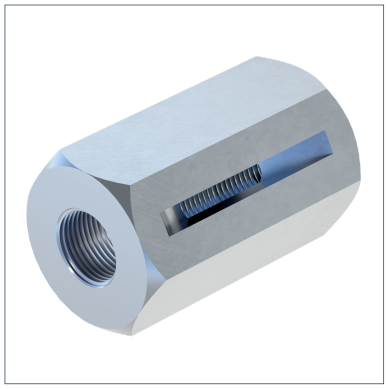

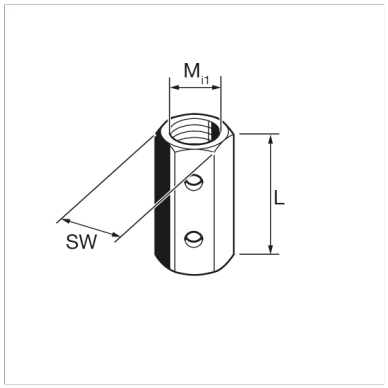

General Information

Joining element for two threaded rods. With two inspection holes (dia. 5 mm) for examining the screwed-in length of thread. During assembly the Rod Coupling has to be locked with two hexagon nuts (not included in scope of delivery).

Installation

During assembly the Rod Coupling has to be locked with two hexagon nuts (not included in scope of delivery).

Material Properties

Halogen-free	0
UV-resistant	0

Material

Primary element material	Stainless Steel A4
Corrosion protection class	CRC II – III (C4 – C5 acc. to DIN EN ISO 12944-2)

Types

Type	Weight	Quantity	Part number
AD IG/IG M 8 X 30 A4	0,022 kg/pcs.	100 pcs.	104818
AD IG/IG M10 X 30 A4	0,041 kg/pcs.	100 pcs.	104827
AD IG/IG M12 X 35 A4	0,041 kg/pcs.	50 pcs.	104836
AD IG/IG M16 X 45 A4	0,086 kg/pcs.	50 pcs.	104845

Dimensions

Type	L	Mi1	SW
AD IG/IG M 8 X 30 A4	30 mm	M8	13 mm
AD IG/IG M10 X 30 A4	30 mm	M10	17 mm
AD IG/IG M12 X 35 A4	35 mm	M12	17 mm
AD IG/IG M16 X 45 A4	45 mm	M16	22 mm

Certification