Flat Leaf Bolt SCR BS

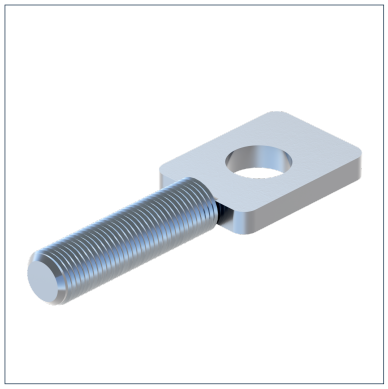

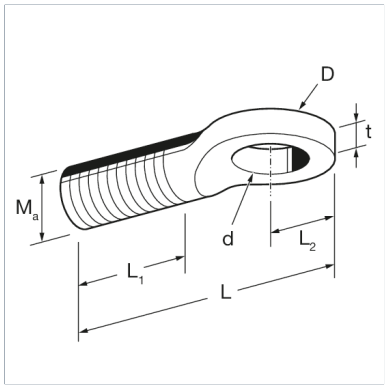

General Information

For connecting the Stabil D-A pipe clamp via its clamp lugs and for adapting threaded rods.

Material Properties

Halogen-free	0
UV-resistant	0

Material

Primary element material	steel
Surface finish	electro galvanized (Fe//Zn)
Corrosion protection class	C2

Forces

Type	-V{Z,perm.}
SCR BS M 8x 20	5,50 kN
SCR BS M 8x 40	5,50 kN
SCR BS M10x 20	5,80 kN
SCR BS M10x 40	5,80 kN
SCR BS M12x 40	7,30 kN
SCR BS M16x 25	13,80 kN

Types

Type	L	Weight	Quantity	Part number
SCR BS M 8x 20	53,00 mm	0,029 kg/pcs.	100 pcs.	102436
SCR BS M 8x 40	73,00 mm	0,038 kg/pcs.	100 pcs.	102445
SCR BS M10x 20	53,00 mm	0,033 kg/pcs.	100 pcs.	102454
SCR BS M10x 40	73,00 mm	0,041 kg/pcs.	50 pcs.	102463
SCR BS M12x 40	73,00 mm	0,058 kg/pcs.	50 pcs.	102764
SCR BS M16x 25	62,00 mm	0,118 kg/pcs.	25 pcs.	101824

Dimensions

Type	B	d	L	L1	L2	Ma	t
SCR BS M 8x 20	24 mm	10 mm	53 mm	20 mm	16 mm	M8	4,5 mm
SCR BS M 8x 40	24 mm	10 mm	73 mm	40 mm	16 mm	M8	4,5 mm
SCR BS M10x 20	24 mm	12,5 mm	53 mm	20 mm	17 mm	M10	4,8 mm
SCR BS M10x 40	24 mm	12,5 mm	73 mm	40 mm	17 mm	M10	4,8 mm

Flat Leaf Bolt SCR BS

Type	B	d	L	L1	L2	Ma	t
SCR BS M12x 40	24 mm	12,5 mm	73 mm	40 mm	17 mm	M12	6 mm
SCR BS M16x 25	30 mm	17 mm	75 mm	22 mm	20 mm	M16	10 mm

Certification

Satifies the VdS standards.