Eye Bolt SCR AS

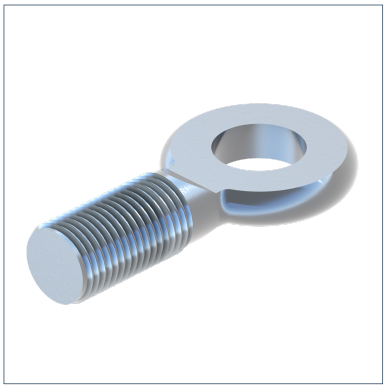

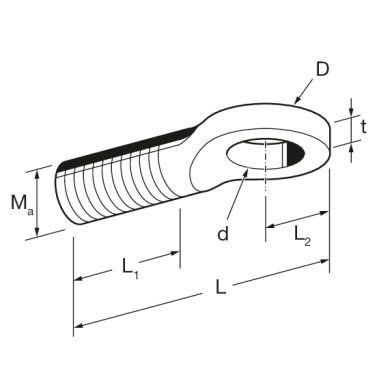

General Information

For attaching hooks, chains or perforated tape, as well as for adapting threaded rods to perforated angle steel beams available on site.

Material Properties

Halogen-free	0
UV-resistant	0

Material

Primary element material	steel
Surface finish	electro galvanized (Fe//Zn)
Corrosion protection class	C2

Forces

Type	-V{Z,perm.}
SCR AS M 8x 20	4,00 kN
SCR AS M10x 20	6,90 kN

Types

Type	L	Weight	Quantity	Part number
SCR AS M 8x 20	45,00 mm	0,015 kg/pcs.	100 pcs.	102418
SCR AS M10x 20	48,00 mm	0,024 kg/pcs.	100 pcs.	102427

Dimensions

Type	D	d	L	L1	L2	Ma	t
SCR AS M 8x 20	21 mm	8,5 mm	44,75 mm	20 mm	10,5 mm	M8	3 mm
SCR AS M10x 20	25 mm	12 mm	48,5 mm	20 mm	12,5 mm	M10	5 mm

Certification