Reducer AD AG/IG

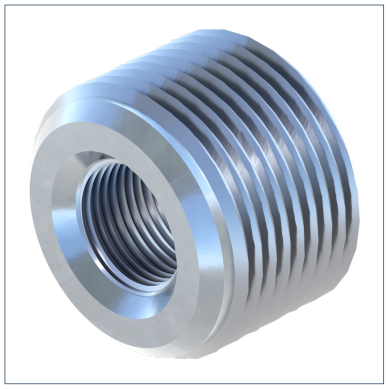

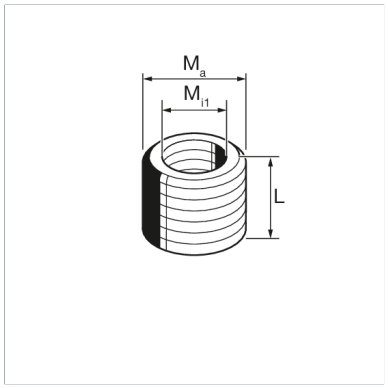

General Information

Thread reduction is used to connect components with different thread sizes and enables flexible adaptation in pipe installations. It is used to implemented thread connection safely and in a space-saving manner.

Material Properties

Halogen-free	0
UV-resistant	0

Material

Primary element material	steel
Surface finish	electro galvanized (Fe//Zn)
Corrosion protection class	C2

Forces

Type	-V{Z,perm.}
AD AG/IG 16/10	8,50 kN
AD AG/IG 16/12	12,50 kN

Types

Type	Mi1	Ma	Weight	Quantity	Part number
AD AG/IG 16/10	M10	M16	0,010 kg/pcs.	25 pcs.	124230
AD AG/IG 16/12	M12	M16	0,007 kg/pcs.	25 pcs.	124267

Dimensions

Type	L	Ma	Mi1
AD AG/IG 16/10	13 mm	M16	M10
AD AG/IG 16/12	13 mm	M16	M12

Certification