Round Rod Coupling AD IG/IG

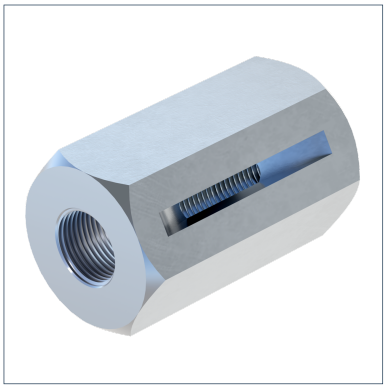

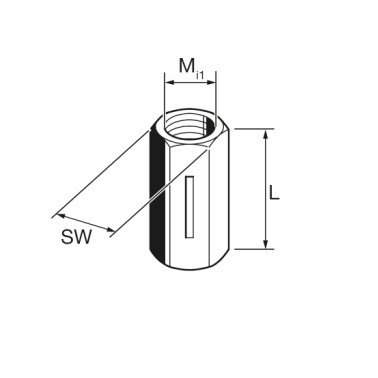

General Information

Element for joining two threaded rods. With slit for visual control of the screwed-in length of thread. During assembly the Rod Coupling has to be locked with two hexagon nuts (not included in scope of delivery).

Installation

During assembly the Rod Coupling has to be locked with two hexagon nuts (not included in scope of delivery).

Material Properties

Halogen-free	0
UV-resistant	0

Material

Primary element material	steel
Surface finish	electro galvanized (Fe//Zn)
Corrosion protection class	C2

Forces

Type	-V{Z,perm.}
AD IG/IG M10 X 30	18,60 kN
AD IG/IG M12 X 35	27,00 kN
AD IG/IG M16 X 40	39,20 kN

Types

Type	Weight	Quantity	Part number
AD IG/IG M 8 X 25	0,019 kg/pcs.	100 pcs.	124920
AD IG/IG M10 X 30	0,042 kg/pcs.	100 pcs.	124939
AD IG/IG M12 X 35	0,040 kg/pcs.	50 pcs.	124948
AD IG/IG M16 X 40	0,075 kg/pcs.	50 pcs.	124957

Dimensions

Type	L	Mi1	SW
AD IG/IG M 8 X 25	25 mm	M8	13 mm
AD IG/IG M10 X 30	30 mm	M10	17 mm
AD IG/IG M12 X 35	35 mm	M12	17 mm
AD IG/IG M16 X 40	40 mm	M16	22 mm

Certification