Ring Bolt SCR RIN C

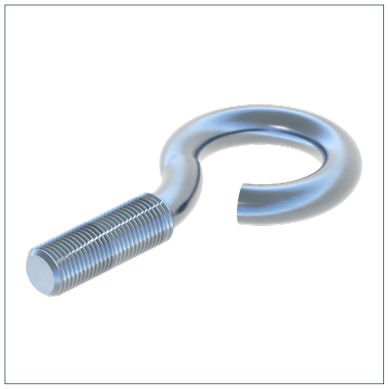

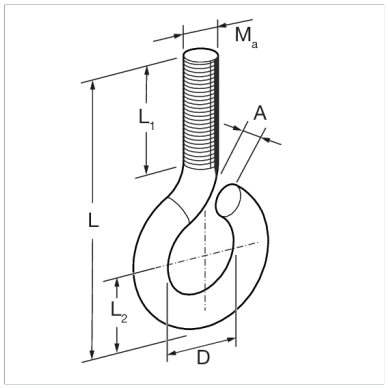

General Information

Connection element for suspended pipe supports.

Material Properties

Halogen-free	0
UV-resistant	0

Material

Primary element material	steel
Surface finish	uncoated
Corrosion protection class	C2

Forces

Type	-V{Z,perm.}
SCR RIN C M12x 40 S	15,00 kN
SCR RIN C M16x 40 S	15,00 kN

Note on loadings

Load figure applies to closed and welded conditions.

Types

Type	L	Weight	Quantity	Part number
SCR RIN C M12x 40 S	40,00 mm	0,16 kg/pcs.	50 pcs.	152981
SCR RIN C M16x 40 S	40,00 mm	0,26 kg/pcs.	25 pcs.	152972

Dimensions

Type	A	D	L	L1	L2	Ma
SCR RIN C M12x 40 S	10 mm	30 mm	102 mm	40 mm	27 mm	M12
SCR RIN C M16x 40 S	10 mm	30 mm	110 mm	40 mm	31 mm	M16

Certification