Bolt Screw Adapter ANT BIT

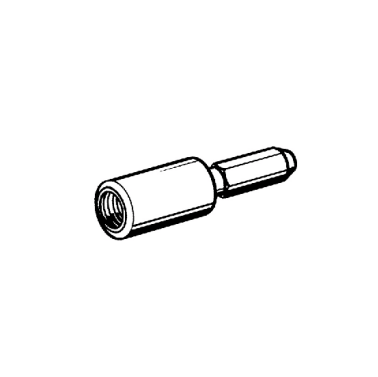

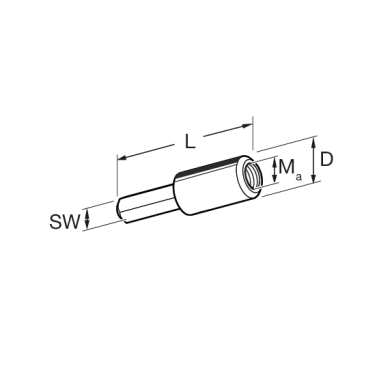

General Information

For fitting Bolt Screws by means of an electric screwdriver.

Material Properties

Halogen-free	0
UV-resistant	0

Material

Primary element material	steel
Corrosion protection class	C2

Additional information

Delivery date upon request - goods are procured on an order-by-order basis.

Types

Type	Weight	Quantity	Part number
ANT BIT M 8	0,028 kg/pcs.	1 pcs.	121343
ANT BIT M10	0,034 kg/pcs.	1 pcs.	121334

Dimensions

Type	D	L	Ma	SW
ANT BIT M 8	12 mm	51 mm	M8	8 mm
ANT BIT M10	14 mm	51 mm	M10	8 mm

Certification