# Bolt Screw BSCR



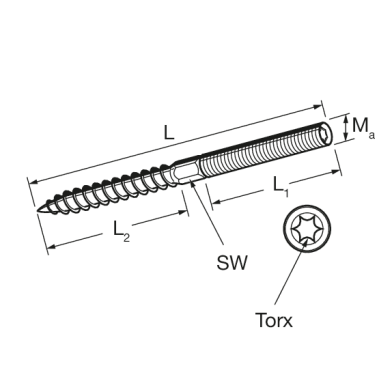


## General Information

For creating a metric threaded connection in wood-based materials or plastic dowels in masonry or concrete.

## Material Properties

| | |
|---|---|
| Halogen-free | 0 |
| UV-resistant | 0 |

## Material

| | |
|---|---|
| Primary element material | steel |
| Surface finish | electro galvanized (Fe//Zn) |
| Corrosion protection class | C2 |

## Types

| Type | L | Weight | Quantity | Part number |
|---|---|---|---|---|
| BSCR M 8/ 50 | 80,00 mm | 0,011 kg/pcs. | 100 pcs. | 124434 |
| BSCR M 8/ 80 | 100,00 mm | 0,019 kg/pcs. | 100 pcs. | 124443 |
| BSCR M 8/100 | 120,00 mm | 0,024 kg/pcs. | 100 pcs. | 124610 |
| BSCR M 8/120 | 140,00 mm | 0,029 kg/pcs. | 100 pcs. | 124595 |
| BSCR M 8/140 | 160,00 mm | 0,036 kg/pcs. | 50 pcs. | 124629 |
| BSCR M 8/160 | 60,00 mm | 0,041 kg/pcs. | 50 pcs. | 124601 |
| BSCR M10/ 60 | 80,00 mm | 0,021 kg/pcs. | 100 pcs. | 153469 |
| BSCR M10/ 80 | 100,00 mm | 0,029 kg/pcs. | 100 pcs. | 124452 |
| BSCR M10/100 | 120,00 mm | 0,038 kg/pcs. | 100 pcs. | 129554 |
| BSCR M10/120 | 140,00 mm | 0,048 kg/pcs. | 50 pcs. | 124461 |
| BSCR M10/140 | 180,00 mm | 0,059 kg/pcs. | 50 pcs. | 124470 |
| BSCR M10/180 | | 0,078 kg/pcs. | 50 pcs. | 131522 |

## Dimensions

| Type | L | L1 | L2 | Ma | SW |
|---|---|---|---|---|---|
| BSCR M 8/ 50 | 50 mm | 10 mm | 30 mm | M8 | 6 mm |
| BSCR M 8/ 80 | 80 mm | 30 mm | 37 mm | M8 | 6 mm |
| BSCR M 8/100 | 100 mm | 40 mm | 50 mm | M8 | 6 mm |
| BSCR M 8/120 | 120 mm | 50 mm | 62 mm | M8 | 6 mm |
| BSCR M 8/140 | 140 mm | 50 mm | 62 mm | M8 | 6 mm |
| BSCR M 8/160 | 160 mm | 50 mm | 62 mm | M8 | 6 mm |
| BSCR M10/ 60 | 60 mm | 20 mm | 37 mm | M10 | |

| Type | L | L1 | L2 | Ma | SW |
|---|---|---|---|---|---|
| BSCR M10/ 80 | 80 mm | 20 mm | 47 mm | M10 | 8 mm |
| BSCR M10/100 | 100 mm | 30 mm | 57 mm | M10 | 8 mm |
| BSCR M10/120 | 120 mm | 50 mm | 57 mm | M10 | 8 mm |
| BSCR M10/140 | 140 mm | 50 mm | 57 mm | M10 | 8 mm |
| BSCR M10/180 | 180 mm | 50 mm | 57 mm | M10 | 8 mm |

## Certification

## Documents

Sikla Metal Anchor Systems