Beam Clip SPA 5P A4



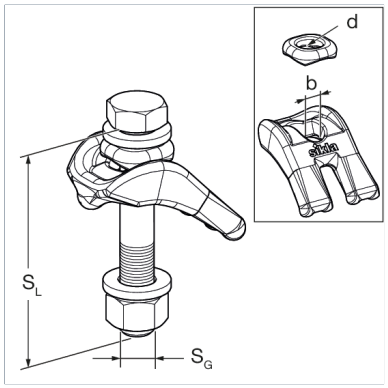

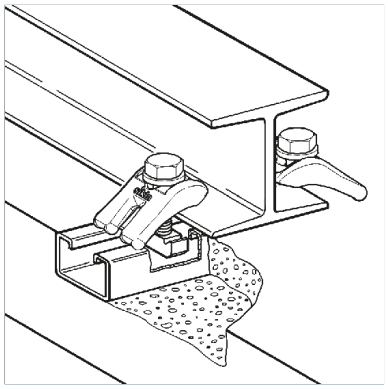

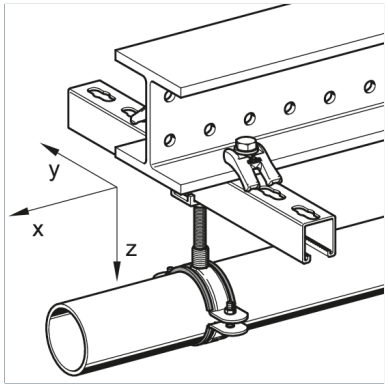

General Information

Universal clamping element for bi-lateral attachment of crossbars for pipe runs, ducts, cable lines and equipment to steel beams.

Installation

Position the Beam Clip with the slit side on the component, the lug has to be positioned on the steel girder. Then insert the appropriate hexagon bolt und tighten it with washer and nut.

Tightening torques:

Type	Tightening torque MA [Nm] / plus revolution	Clamping range [mm]
M12	60 / 90°	1 - 30
M16	140 / 90°	4 - 40

For further information on installation, see the document with installation instructions.

Material Properties

Halogen-free	0
UV-resistant	0

Material

Primary element material	Stainless Steel A4
Corrosion protection class	CRC II – III (C4 – C5 acc. to DIN EN ISO 12944-2)

Forces

Type	-V{X,perm.}	V{X,perm.}	-V{Z,perm.}	V{Z,perm.}
SPA 5P M12 A4	2,50 kN	2,50 kN	11,00 kN	11,00 kN
SPA 5P M16 A4	3,00 kN	3,00 kN	13,90 kN	13,90 kN

Note on loadings

1) These value refer to the use of a standard stainless steel hexagon screw of strength class 70.

2) These values refer to the worst-case scenario for flange thicknesses of 30 mm (M12) or 40 mm (M16) and a friction coefficient $\mu_s \geq 0.2$. Any tensile force Fz acting on the flange has not been taken into account.

Types

Type	Weight	Quantity	Part number
SPA 5P M12 A4	0,16 kg/pcs.	20 pcs.	803802
SPA 5P M16 A4	0,27 kg/pcs.	20 pcs.	803803

Beam Clip SPA 5P A4

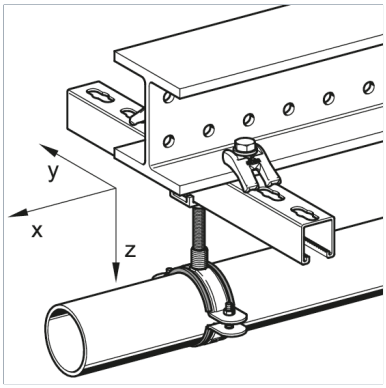

Dimensions

Type	b	d
SPA 5P M12 A4	13 mm	13 mm
SPA 5P M16 A4	17 mm	17 mm

Certification

EDELSTAHL Rostfrei®

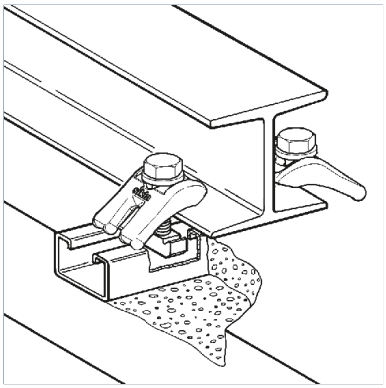

Documents

Installation - Beam Clip SPA 5P HCP