Nail Anchor AN N

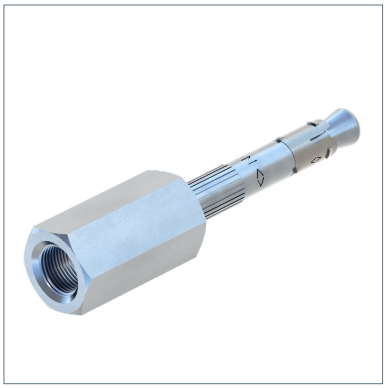

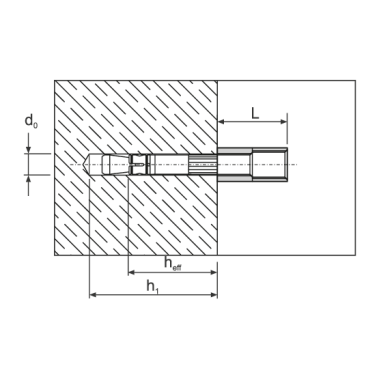

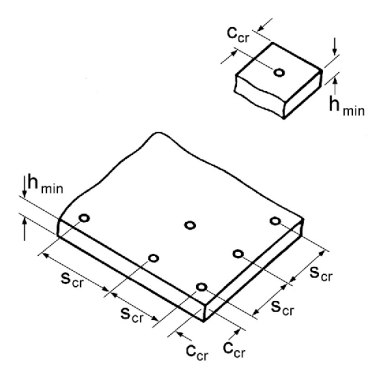

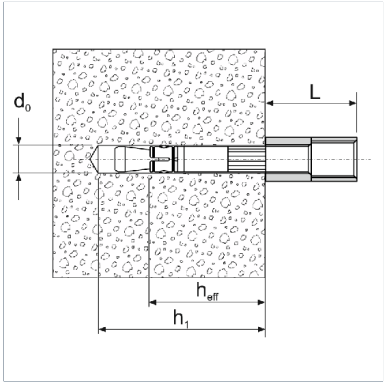

General Information

Suitable for the quick and easy mounting of components to a concrete soffit or shear wall. The internal dual thread M8/M10 allows for a direct easy connection with the Nail Anchor (e.g. M&E service supports). The reduced drilling depth of 35 mm and the bore dia. of 6 mm minimise the risk of hitting a rebar during installation and reduces the overall cost of drilling.

Installation

Fast and simple setting of the Nail Anchor AN N M8/M10:
1. Drilling
2. Cleaning of bore hole
3. Hammer in - ready!

Material Properties

Halogen-free	0
UV-resistant	0

Material

Primary element material	steel
Surface finish	electro galvanized (Fe//Zn)
Corrosion protection class	C2

Fire resistance

Type	Fire Resistance 30 min	Fire Resistance 60 min	Fire Resistance 90 min	Fire Resistance 120 min
AN N 6X25 M8/M10	0,6 kN	0,6 kN	0,6 kN	0,5 kN
AN N 6X30 M8/M10	0,8 kN	0,7 kN	0,6 kN	0,6 kN

Types

Type	L	Weight	Quantity	Part number
AN N 6X25 M8/M10	25,00 mm	0,027 kg/pcs.	100 pcs.	112152
AN N 6X30 M8/M10	25,00 mm	0,027 kg/pcs.	100 pcs.	117561

Certification

Europäische Technische Zulassung - nach ETAG001-06
ETA-13/0048

Stahl

epd-global
Powered by EPD-Norway

Sikla approval ETA-13/0048
For the multiple use for non-structural applications in concrete (min. C12/15 and max. C50/60). Fire protection testing, VdS-conform

Documents



DoP - Nail Anchor AN N



VdS Approval - Sikla Anchors – Types AN, BZ, TSM (DN 0–100)



Nail Anchor AN - ETA 13/0048



Sikla Metal Anchor Systems



Nail Anchor AN N - Technical Data