Clamp VBO C 40

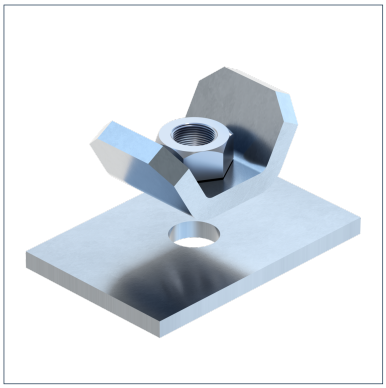

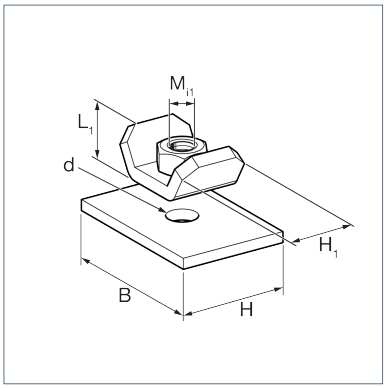

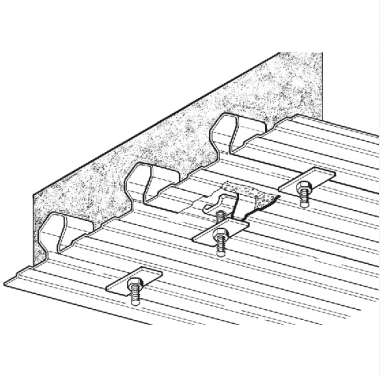

General Information

Developed for COFRASTA 40 composite ceilings. May be used for single or crossbar mounting solutions. The holder is mainly used in ventilation systems.

Installation

When mounting, make sure that the threaded rods are screwed in sufficiently and retained well, thus preventing any accidental unscrewing.

Material Properties

Halogen-free	0
UV-resistant	0

Material

Primary element material	steel
Surface finish	electro galvanized (Fe//Zn)
Corrosion protection class	C2

Forces

Type	-V{Z,perm.}
VBO C 40/ 0/M 8	2,00 kN
VBO C 40/ 0/M10	2,00 kN

Note on loadings

Bei Traversen oder Grundplatten darf die Last entsprechend der Anzahl der im Verbund eingesetzten Halter erhöht werden. Die zulässige Belastung der Decke ist zu beachten.

Types

Type	Weight	Quantity	Part number
VBO C 40/ 0/M 8	0,130 kg/pcs.	100 pcs.	146575
VBO C 40/ 0/M10	0,143 kg/pcs.	100 pcs.	146478

Dimensions

Type	B	d	H	H1	L1	Mi1
VBO C 40/ 0/M 8	60 mm	11 mm	40 mm	25 mm	19 mm	M8
VBO C 40/ 0/M10	60 mm	11 mm	40 mm	25 mm	19 mm	M10

Certification