Wedge Bolt KB

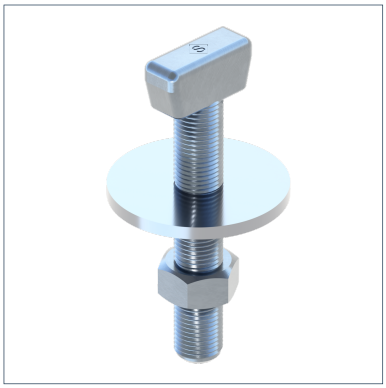

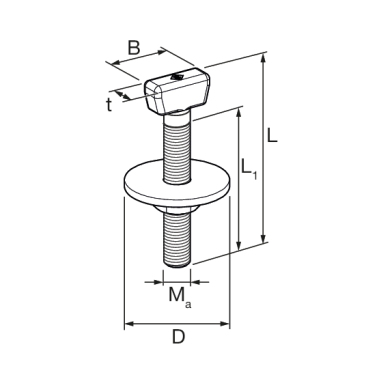

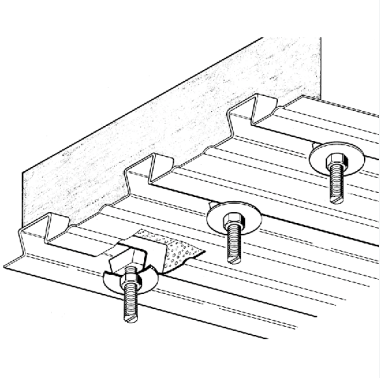

General Information

Developed for HOLORIB composite ceilings. May be used for single or multi-point mounting solutions for crossbars or mounting plates.

Material Properties

Halogen-free	0
UV-resistant	0

Material

Primary element material	steel
Connecting element material	steel
Surface finish	electro galvanized (Fe//Zn)
Corrosion protection class	C2

Forces

Type	-V{Z,perm.}
KB M 8 X 42	2,20 kN
KB M10 X 57	2,20 kN

Note on loadings

Load value applies to ceiling type 51/150.
When using crossbars or mounting plates, the individual load values as indicated in the table may be multiplied on the basis of the number of wedge bolts applied. The carrying capacity of the other elements (crossbars, etc.) may restrict the application.

Types

Type	Weight	Quantity	Part number
KB M 8 X 42	0,07 kg/pcs.	100 pcs.	138042
KB M10 X 57	0,089 kg/pcs.	100 pcs.	138051

Dimensions

Type	B	D	L	L1	Ma	t
KB M 8 X 42	25 mm	40 mm	58 mm	42 mm	M8	10 mm
KB M10 X 57	25 mm	40 mm	77 mm	62 mm	M10	10 mm

Certification