Hook Sleeve SP1

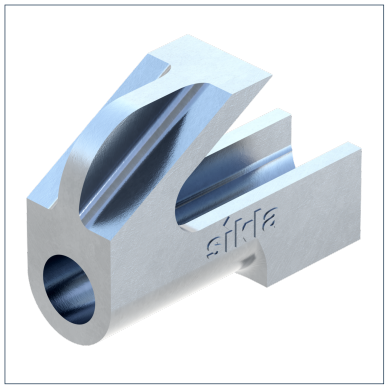

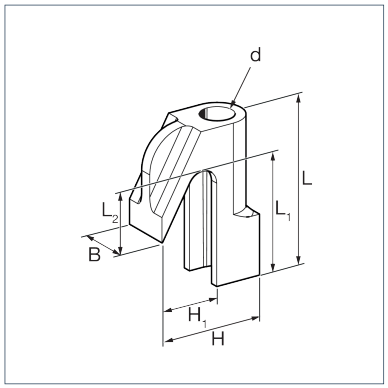

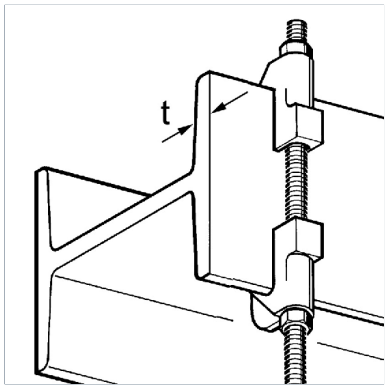

General Information

Used in combination with profiled beams as a holder for single-point mountings or for mounting crossbars.

Installation

Equipped with a (o/ 13 mm) boring for use with M8 to M12 grub screws. When using an M8 grub screw, we recommend the use of a flange nut. First tighten sturdy, after that tighten up with max 1 1/2 turns.

Material Properties

Halogen-free	0
UV-resistant	0

Material

Primary element material	cast steel
Surface finish	electro galvanized (Fe//Zn)
Corrosion protection class	C2

Types

Type	Weight	Quantity	Part number
SP1	0,127 kg/pcs.	50 pcs.	106777

Dimensions

Type	B	d	H	H1	L	L1	L2
SP1	20 mm	12,5 mm	41 mm	23 mm	60 mm	45 mm	23 mm

Certification

epd-global
Powered by EPD-Norway

Documents

Loads – Hook Sleeve SP