Threaded Hook GH



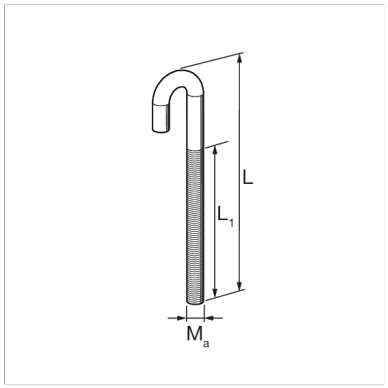

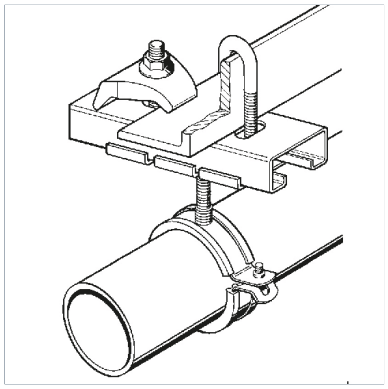

General Information

Used in combination with profiled beams as a holder for mounting crossbars composed of Sikla Channels or other standard profiles.

Material Properties

Halogen-free	0
UV-resistant	0

Material

Primary element material	steel
Surface finish	electro galvanized (Fe//Zn)
Corrosion protection class	C2

Forces

Type	-V{Z,perm.}
GH M 8X 75	2,50 kN
GH M 8X115	2,50 kN
GH M10X150	4,00 kN

Types

Type	Weight	Quantity	Part number
GH M 8X 75	0,035 kg/pcs.	100 pcs.	101587
GH M 8X115	0,049 kg/pcs.	100 pcs.	101596
GH M10X150	0,100 kg/pcs.	50 pcs.	101602

Dimensions

Type	L	L1	Ma
GH M 8X 75	83 mm	50 mm	M8
GH M 8X115	123 mm	70 mm	M8
GH M10X150	160 mm	90 mm	M10

Certification