Threaded Pin w/Collar DOP



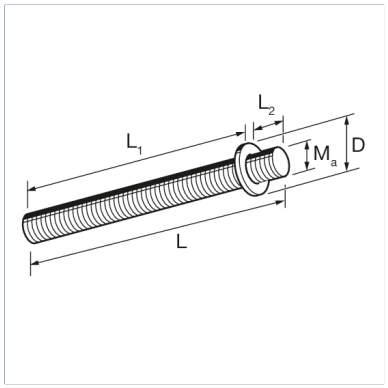

General Information

The threaded double nipple is used to securely connect two components with internal threads, such as pipes or fittings.

Material Properties

Halogen-free	0
UV-resistant	0

Material

Primary element material	steel
Surface finish	electro galvanized (Fe//Zn)
Corrosion protection class	C2

Forces

Type	-V{Z,perm.}
DOP M8 40 MM	5,50 kN

Types

Type	Weight	Quantity	Part number
DOP M8 40 MM	0,013 kg/pcs.	100 pcs.	137704

Dimensions

Type	D	L	L1	L2	Ma
DOP M8 40 MM	11 mm	40 mm	34 mm	4 mm	M8

Certification