# Guiding Set FS Z HCP

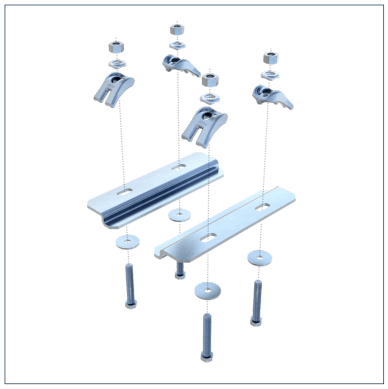

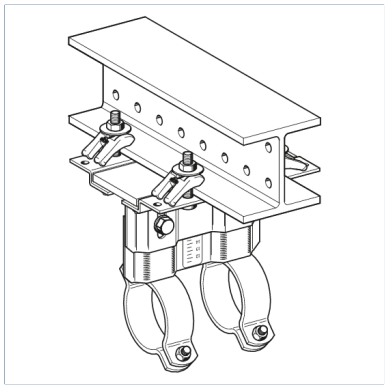

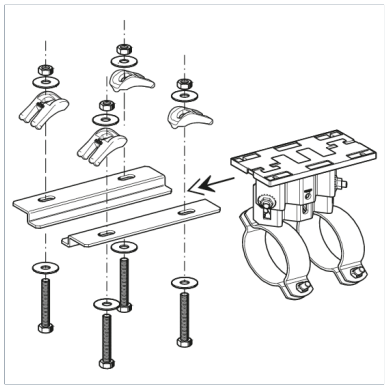

## General Information

For suspension of a Guided Pipe Shoe from a siMotec Beam Section 100 resp. 120 or another steel girder with a flange width of 80 up to 120 mm.

## Installation

The guide rails are to be fixed with the attached connection kit below the beam with 2mm clearance to the support at the side. Torque for the M12 bolts of the Assembly Set = 85 Nm.

## Material Properties

| | |
|---|---|
| Halogen-free | 0 |
| UV-resistant | 0 |

## Material

| | |
|---|---|
| Primary element material | steel cast steel |
| Connecting element material | steel |
| Surface finish | HCP |
| Corrosion protection class | C4 |

## Additional information

Also available with DualShield for high corrosion protection within C5H environments.

## Types

| Type | Min. flange width | Max. flange width | Weight | Quantity | Part number |
|---|---|---|---|---|---|
| FS Z 80/120 HCP | 80,00 mm | 120,00 mm | 2,740 kg/pcs. | 1 pcs. | 110398 |

## Certification

TÜVRheinland ZERTIFIZIERT