T-Adapter TA 120 HCP

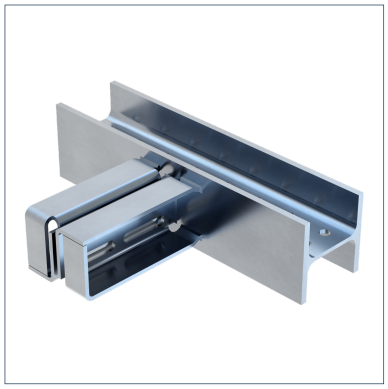

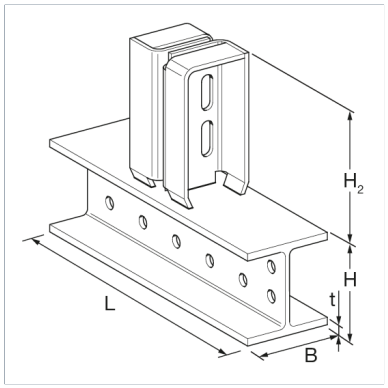

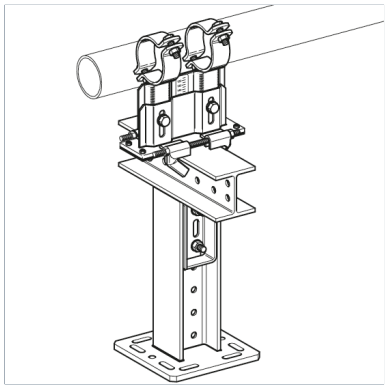

General Information

In combination with Beam Bracket TKO 120, the T-Adapter permits different T-structures on the floor or hanging T-structures without need of further accessories. Oblong holes permit a simple compensation up to 50 mm on structural situations.

Installation

Configuration: Beam 120 welded to beam holder

Material Properties

Halogen-free	0
UV-resistant	0

Material

Primary element material	steel
Connecting element material	steel
Surface finish	HCP
Corrosion protection class	C4

Additional information

Also available with DualShield for high corrosion protection within C5H environments.

Types

Type	L	Weight	Quantity	Part number
TA 120- 200 HCP	200 mm	8,1 kg/pcs.	1 pcs.	193112
TA 120- 400 HCP	400 mm	13,95 kg/pcs.	1 pcs.	193129
TA 120- 600 HCP	600 mm	18,95 kg/pcs.	1 pcs.	193136

Dimensions

Type	B	H	H2	L	t
TA 120- 200 HCP	120 mm	120 mm	172 mm	200 mm	11 mm
TA 120- 400 HCP	120 mm	120 mm	172 mm	400 mm	11 mm
TA 120- 600 HCP	120 mm	120 mm	172 mm	600 mm	11 mm

Certification

Stahl

Documents

Static Guideline - siFramo & siMotec