Joining Beam Bracket QKO-Q 120 HCP

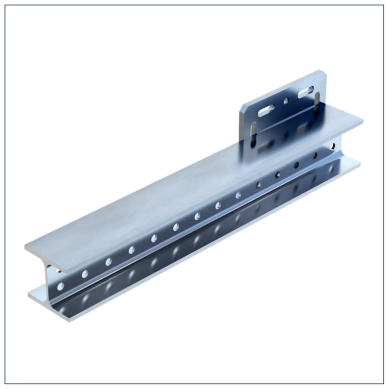

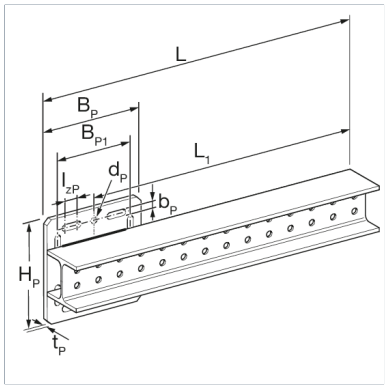

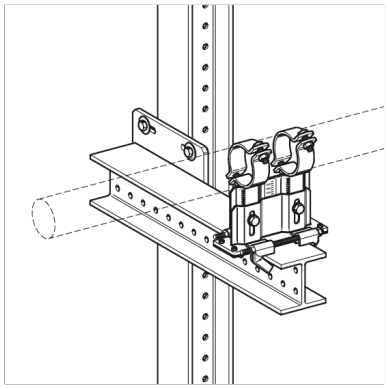

General Information

Element for vertical assembly on concrete or steel beams, especially for risers. The support is turned by 90° and thus fixed vertically on the base plate.

Installation

Depending on the situation, different options are recommended:
a) Fixing on concrete by means of 4 heavy duty anchors M12
b) Frictional connection to steel beams (flange width 80 - 120 mm) by means of Assembly Set 5P M12 S.
c) Interlocking connection to TKO 100 or 120 by means of Bracket Plates FV 100/120
Configuration: Base plate and support flange welded to IPBl 120

Material Properties

Halogen-free	0
UV-resistant	0

Material

Primary element material	steel
Surface finish	HCP
Corrosion protection class	C4

Additional information

Also available with DualShield for high corrosion protection within C5H environments.

Types

Type	Weight	Quantity	Part number
QKO-Q 120- 600 HCP	22,4 kg/pcs.	1 pcs.	193242
QKO-Q 120-1000 HCP	33,6 kg/pcs.	1 pcs.	193259

Dimensions

Type	BP	BP1	bP	dP	HP	lzP	L	L1	tP
QKO-Q 120- 600 HCP	220 mm	170 mm	14 mm	14 mm	220 mm	30 mm	700 mm	600 mm	12 mm
QKO-Q 120-1000 HCP	220 mm	170 mm	14 mm	14 mm	220 mm	30 mm	1.100 mm	1.000 mm	12 mm

Certification

Stahl

CE mark (Declaration of performance see downloads)

Documents

Static Guideline - siFramo & siMotec