Beam Bracket TKO 120 HCP

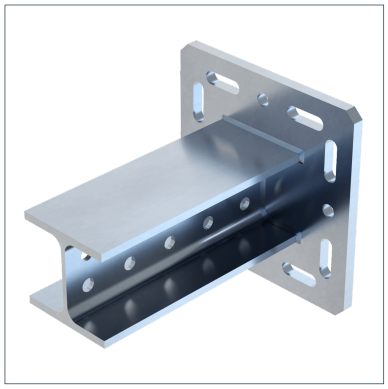

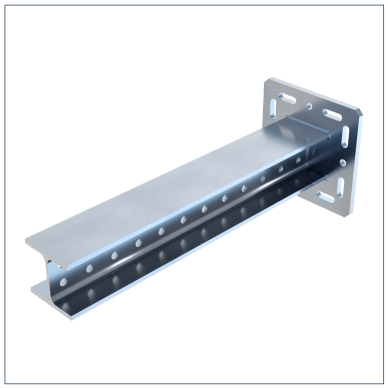

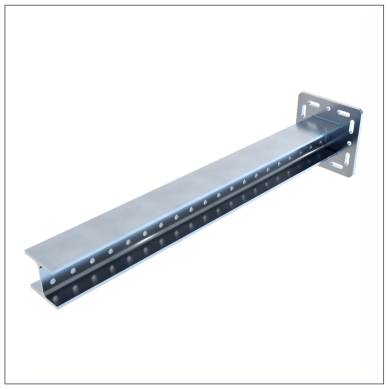

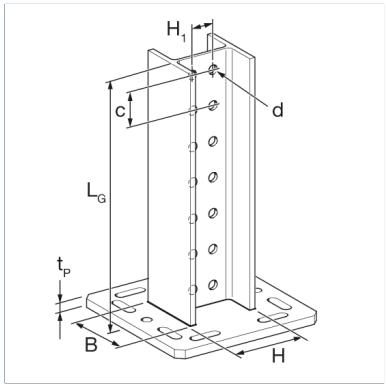

General Information

Element for mounting to floors, ceilings or walls, or for assembling crossbars. Types TKO 120 x 1500, 2000 and 3000 are not suitable for cantilever arrangements.

Installation

Depending on the situation, different options are recommended:
a) Fixing to building structure using 4 heavy-duty anchors M12.
b) Frictional connection to steel beams (flange width 80 - 120 mm) with Assembly Set 5P M12 S.
c) Interlocking connection to other beam brackets TKO 100 or 120 by means of Bracket Plates FV 100/120.
The ø 13 mm holes following a 50 mm grid allow the combination with other products using M12 bolts.
Configuration: Base plate welded to IPB120 beam

Material Properties

Halogen-free	0
UV-resistant	0

Material

Primary element material	steel
Surface finish	HCP
Corrosion protection class	C4

Additional information

Also available with DualShield for high corrosion protection within C5H environments.

Types

Type	LG	Weight	Quantity	Part number
TKO 120- 350 HCP	362 mm	13,29 kg/pcs.	1 pcs.	193150
TKO 120- 600 HCP	612 mm	19,9 kg/pcs.	1 pcs.	193167
TKO 120- 800 HCP	812 mm	26,05 kg/pcs.	1 pcs.	193174
TKO 120-1000 HCP	1.012 mm	30,48 kg/pcs.	1 pcs.	193181
TKO 120-1500 HCP	1.512 mm	43,7 kg/pcs.	1 pcs.	193198
TKO 120-2000 HCP	2.012 mm	56,93 kg/pcs.	1 pcs.	193204
TKO 120-3000 HCP	3.012 mm	83,38 kg/pcs.	1 pcs.	193105

Dimensions

Type	B	C	d	H	H1	LG	tP
TKO 120- 350 HCP	120 mm	50 mm	13,5 mm	120 mm	50 mm	362 mm	12 mm
TKO 120- 600 HCP	120 mm	50 mm	13,5 mm	120 mm	50 mm	612 mm	12 mm

Beam Bracket TKO 120 HCP

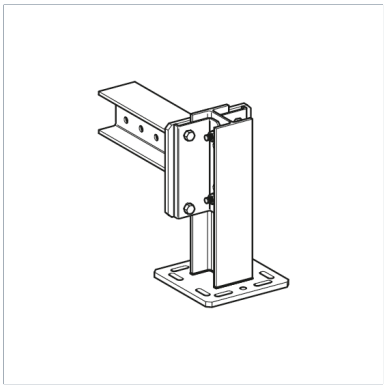

Type	B	C	d	H	H1	LG	tP
TKO 120- 800 HCP	120 mm	50 mm	13,5 mm	120 mm	50 mm	812 mm	12 mm
TKO 120-1000 HCP	120 mm	50 mm	13,5 mm	120 mm	50 mm	1.012 mm	12 mm
TKO 120-1500 HCP	120 mm	50 mm	13,5 mm	120 mm	50 mm	1.512 mm	12 mm
TKO 120-2000 HCP	120 mm	50 mm	13,5 mm	120 mm	50 mm	2.012 mm	12 mm
TKO 120-3000 HCP	120 mm	50 mm	13,5 mm	120 mm	50 mm	3.012 mm	12 mm

Certification

Stahl

CE mark (Declaration of performance see downloads)
ETA-24/0471

Documents

Static Guideline - siFramo & siMotec