End Cap ADK 100

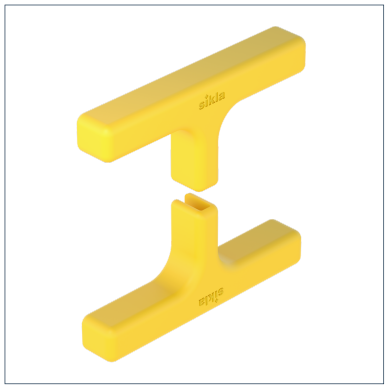

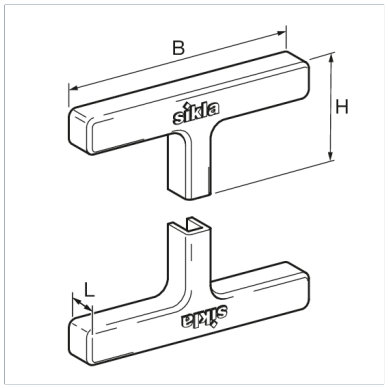

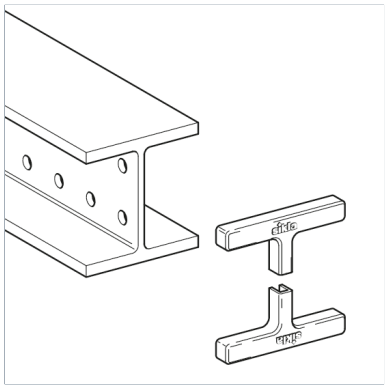

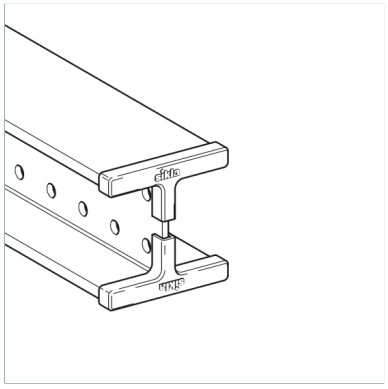

General Information

End Cap for clean finish at the ends of TKO 100, QKO 100 and other components based on a HEB 100 steel beam.

Levels of Resistance

Limited resistance	weather resistant

Material Properties

Halogen-free	0
UV-resistant	0

Material

Primary element material	PP

Types

Type	Weight	Quantity	Part number
ADK 100	0,023 kg/pcs.	50 pcs.	190433

Dimensions

Type	B	H	L
ADK 100	110 mm	48 mm	18 mm