Joining Beam Bracket QKO 100 HCP



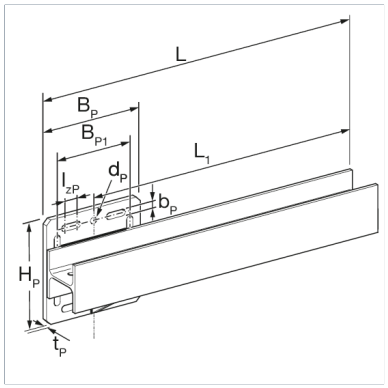

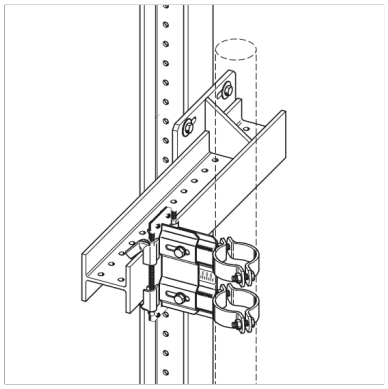

General Information

Element for vertical assembly on concrete or steel beams, especially for risers. The flange surface is parallel to the base plate and welded on one side with a support plate.

Installation

Depending on the situation, different options are recommended:
a) Fixing on concrete by means of 4 heavy duty anchors M12
b) Frictional connection to steel beams (flange width 80 - 120 mm) by means of Assembly Set 5P M12 S.
c) Interlocking connection to TKO 100 or 120 by means of Bracket Plates FV 100/120
Configuration: Base plate and support flange welded to IPBl 100

Material Properties

Halogen-free	0
UV-resistant	0

Material

Primary element material	steel
Surface finish	HCP
Corrosion protection class	C4

Additional information

Also available with DualShield for high corrosion protection within C5H environments.

Types

Type	Weight	Quantity	Part number
QKO 100- 600 HCP	16,13 kg/pcs.	1 pcs.	183917
QKO 100-1000 HCP	24,054 kg/pcs.	1 pcs.	183926

Dimensions

Type	BP	BP1	bP	dP	HP	lzP	L	L1	tP
QKO 100- 600 HCP	220 mm	170 mm	14 mm	14 mm	220 mm	30 mm	700 mm	600 mm	12 mm
QKO 100-1000 HCP	220 mm	170 mm	14 mm	14 mm	220 mm	30 mm	1.100 mm	1.000 mm	12 mm

Certification

Stahl

CE mark (Declaration of performance see downloads)