Bracing Arm SKO 100 HCP

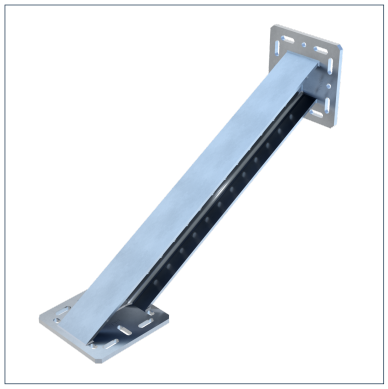

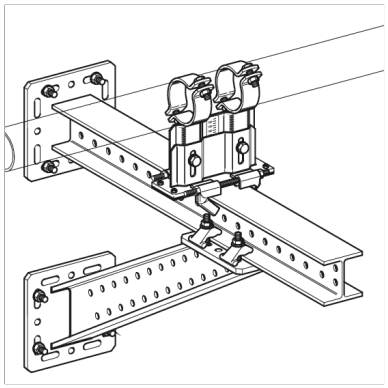

General Information

Beam Bracket suitable as support for horizontal structures or as reinforcement of bearing constructions on site.

Installation

Depending on the situation, different options are recommended:
a) Fixing to the building structure using 4 heavy-duty anchors M12.
b) Frictional construction to steel beams (flange width 80 - 120 mm) with Assembly Set 5P M12 S.
c) Interlocking connection to Beam Bracket TKO 100 or 120 by means of Bracket Plates FV 100/120.

Material Properties

Halogen-free	0
UV-resistant	0

Material

Primary element material	steel
Surface finish	HCP
Corrosion protection class	C4

Additional information

Also available with DualShield for high corrosion protection within C5H environments.

Types

Type	Weight	Quantity	Part number
SKO 100/120 HCP	22 kg/pcs.	1 pcs.	191531

Dimensions

Type	BP	BP1	BP2	BP3	bP	BPo	BPo1	HG	HP	HP1	HPo	HPo1	lzP	lzP1	LG	tP	tPo	W
SKO 100/120 HCP	220 mm	170 mm	140 mm	129 mm	14 mm	220 mm	170 mm	512 mm	220 mm	170 mm	220 mm	170 mm	30 mm	6 mm	797 mm	12 mm	12 mm	30°

Certification

CE mark (Declaration of performance see downloads)

Documents

Static Guideline - siFramo & siMotec