End Cap ADK 120

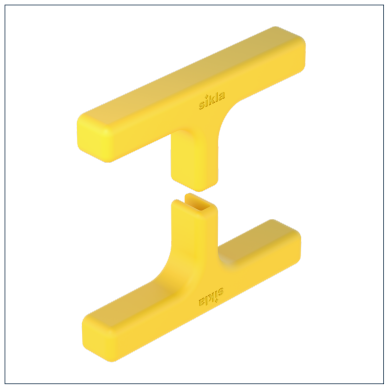

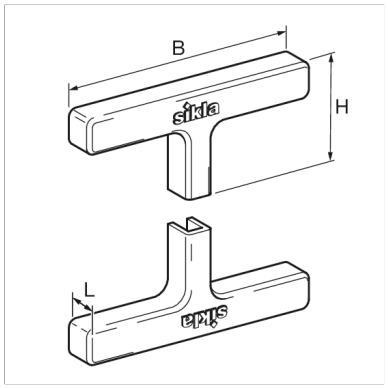

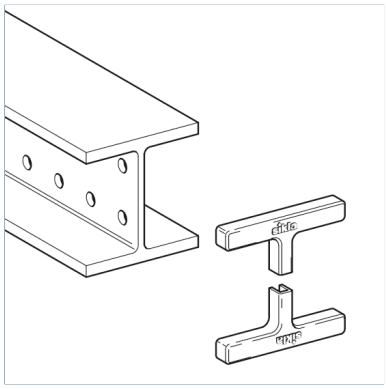

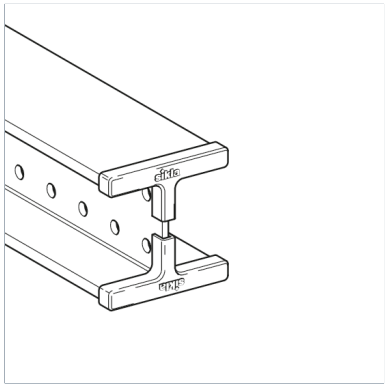

General Information

End Cap for clean finish at the ends of TKO 120, QKO 120 and other components based on a HEB 120 steel beam.

Levels of Resistance

Limited resistance	weather resistant

Material Properties

Halogen-free	0
UV-resistant	0

Material

Primary element material	HDPE

Types

Type	Weight	Quantity	Part number
ADK 120	0,02 kg/pcs.	50 pcs.	173189

Dimensions

Type	B	H	L
ADK 120	130 mm	56 mm	18 mm