Grating Support AG HCP

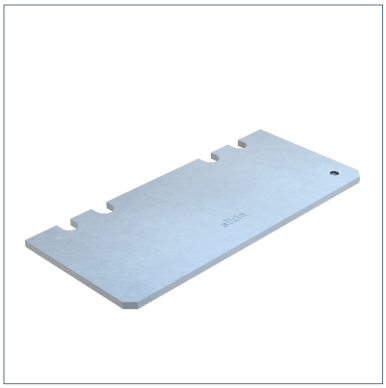

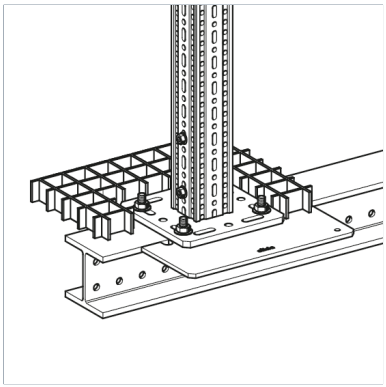

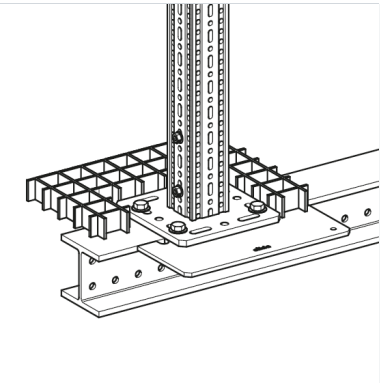

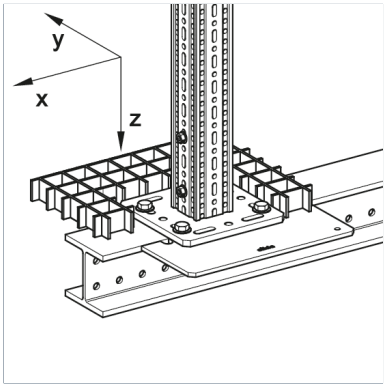

General Information

Support plate for gratings in combination with Sikla components on steel beams. The support plate is clamped to the steel beam and closes the gap between the base plate and the cut-out grating. This creates a fall protection device and eliminates the need for welded upstands on the grating edge.

Installation

The grating support is clamped to the steel beam together with the base plate of the Sikla component using the MS 5P mounting set. Subsequent assembly is possible. The grating support can be used on one or both sides and can be combined with all base plate sizes. The recesses for the screws of the assembly sets are matched to all beams widths and to the two sizes M12 and M16.

Assembly note: Turn hexagon head screw (screw head on top of the panel, thread downwards to avoid a tripping edge, see figure).

Material Properties

Halogen-free	0
UV-resistant	0

Material

Primary element material	steel
Surface finish	HCP
Corrosion protection class	C4

Forces

Type	-V{Z,perm.}
AG 80/310 - 160X360 HCP	5,50 kN

Types

Type	Weight	Quantity	Part number
AG 80/310 - 160X360 HCP	3,51 kg/pcs.	1 pcs.	802766

Certification

Stahl