Axial Stop AS F 80 HCP

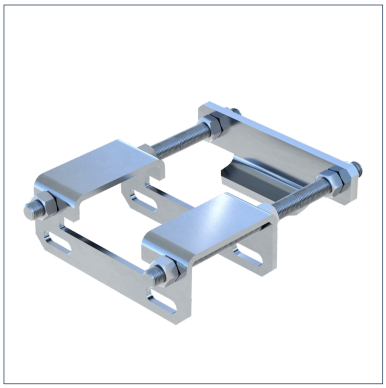

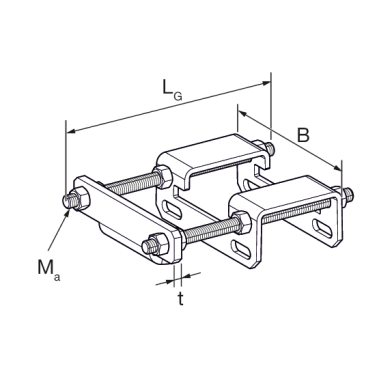

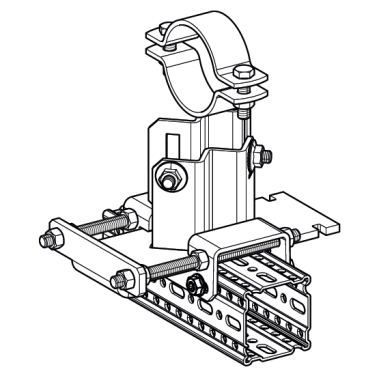

General Information

Modification of siMotec pipe shoes to a single-sided axial stop, for use with siFramo F 80 profiles. Using the Axial stop, the pipe shoe can move axially through the pipe to a predefined degree of displacement, with restricted limits in one axial direction. .

Installation

The sliding plate of the pipe shoe is dismantled. The shoe bracket is connected to the beam section F 80 with 4 FLS F self-forming screws. The required amount of axial movement is determined using the supplied nuts, with a maximum displacement of 125 mm, equating to half of the sliding plate. Forces in the axial direction can only be achieved if anti-slip devices (e.g. cleats/stoppers) are used properly. These must be provided when designing the pipeline and are the responsibility of the pipeline manufacturer.

Material Properties

Halogen-free	0
UV-resistant	0

Material

Primary element material	steel
Surface finish	HCP
Corrosion protection class	C4

Forces

Type	-V{X,perm.}	V{X,perm.}
AS F 80 HCP	12,00 kN	12,00 kN

Note on loadings

Load capacities correspond to the values of the fixed point bracket XW F, see documentation in the catalogue. However, maximum axial load is 12 kN per Axial stop.

Additional information

Also available with DualShield for high corrosion protection within C5H environments.

Types

Type	Weight	Quantity	Part number
AS F 80 HCP	1,600 kg/pcs.	1 pcs.	802787

Dimensions

Type	B	LG	Ma	t
AS F 80 HCP	160 mm	220 mm	M12	8 mm

Certification

