Welding Adapter ASA-Q F100 HCP

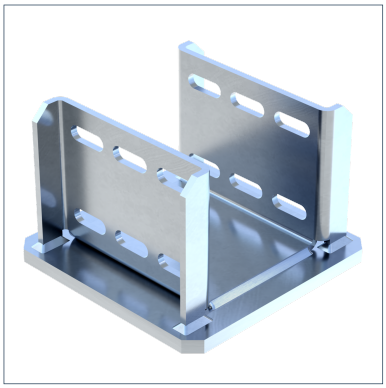

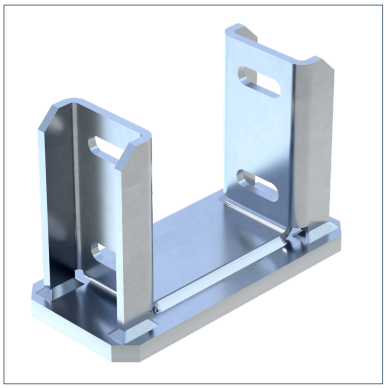

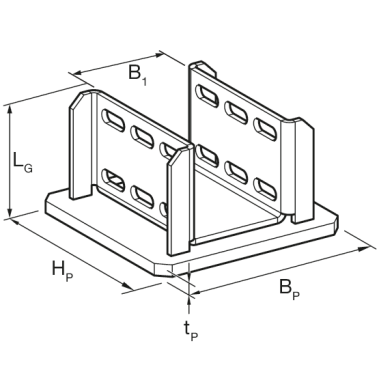

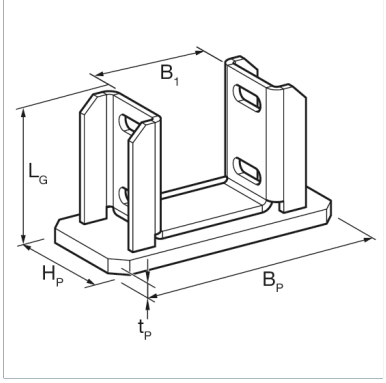

General Information

Welding plate with intake to receive siFramo 100 beam sections. May be implemented into the structural steel design in anticipation of siFramo-frames or used in situ as a connection element when clamping is not an option but hot works are permitted.

Installation

The welding plate of the ASA can be welded directly without previous treatment due to a corrosion-resistant weld-thru coating which is compatible with both the HDG surface of the siFramo section and the health and safety requirements of the welding process. Once the ASA adapter has been connected, the coating may also receive paint without previous treatment.

Type ASA QS:The siFramo section must be connected with 4 x Self Forming Screw FLS.
Type ASA Q: The siFramo section must be connected with 12 x Self Forming Screw FLS.

Material Properties

Halogen-free	0
UV-resistant	0

Material

Primary element material	steel
Surface finish	HCP
Corrosion protection class	C4

Forces

Type	-V{X,Rd}	V{X,Rd}	-V{Y,Rd}	V{Y,Rd}	-V{Z,Rd}	V{Z,Rd}
ASA-Q F100 HCP	63,9 kN	63,9 kN	63,9 kN	63,9 kN	63,9 kN	63,9 kN
ASA-QS F100 HCP	11,7 kN	11,7 kN	63,9 kN	63,9 kN	63,9 kN	63,9 kN

Moments

Type	-M{Y,Rd}	M{Y,Rd}	-M{Z,Rd}	M{Z,Rd}
ASA-Q F100 HCP	100 kNm	100 kNm	8,2 kNm	8,2 kNm
ASA-QS F100 HCP	20 kNm	20 kNm	3,7 kNm	3,7 kNm

Note on loadings

The specified load values are design loads Rd and include a partial safety factor $\gamma M2 = 1.25$ (DIN EN 1993-1-8:2025-04, Table 4.1)
A partial safety factor of $\gamma G = 1.35$ (DIN EN 1990:2021-10, Table A1.2(B)) must be taken into account for permanent loads.

Additional information

Also available with DualShield for high corrosion protection within C5H environments.

Welding Adapter ASA-Q F100 HCP

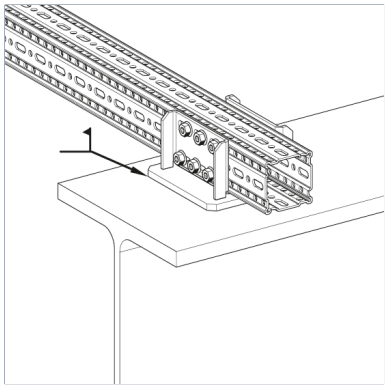

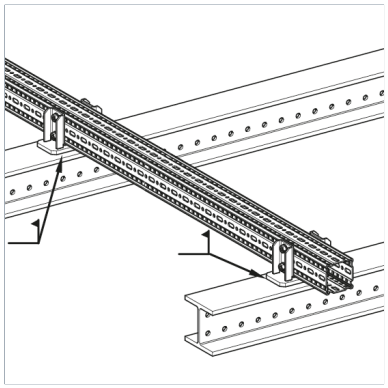

Types

Type	LG	Weight	Quantity	Part number
ASA-Q F100 HCP	115 mm	4,260 kg/pcs.	1 pcs.	116393
ASA-QS F100 HCP	115 mm	2,020 kg/pcs.	1 pcs.	116397

Dimensions

Type	B1	BP	HP	LG	tP
ASA-Q F100 HCP	102 mm	170 mm	170 mm	115 mm	10 mm
ASA-QS F100 HCP	102 mm	170 mm	170 mm	115 mm	10 mm

Certification

Stahl