Cantilever Bracket AK F 80-Q HCP

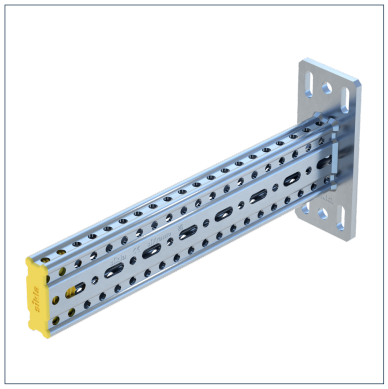

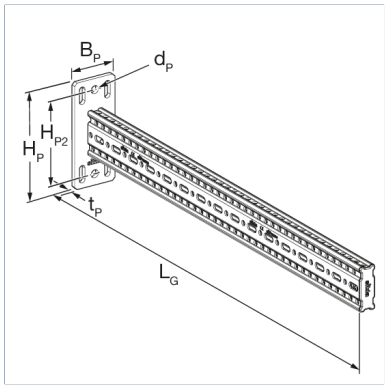

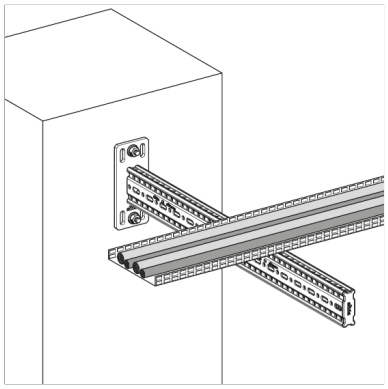

General Information

Galvanised box-section with welded end-plate to serve as cantilever arm for Beam Section TP F 80 or Beam Bracket TKO F 80. Solid cantilevers e.g. for cable containment when fixed to walls with suitable wall anchors M12.

Installation

With 4 x Self Forming Screw FLS when fixed to another siFramo hollowbox-section. Fixing to walls and ceilings with suitable wall anchors M12.

Material Properties

Halogen-free	0
UV-resistant	0

Material

Primary element material	steel
Surface finish	HCP
Corrosion protection class	C4

Note on loadings

The specified load values are design loads Rd and include a partial safety factor $\gamma M2 = 1.25$ (DIN EN 1993-1-8:2025-04, Table 4.1)
A partial safety factor of $\gamma G = 1.35$ (DIN EN 1990:2021-10, Table A1.2(B)) must be taken into account for permanent loads.

Additional information

Also available with DualShield for high corrosion protection within C5H environments.

Types

Type	LG	Weight	Quantity	Part number
AK-Q F 80/30- 400 HCP	409 mm	2,650 kg/pcs.	1 pcs.	117292
AK-Q F 80/30- 800 HCP	809 mm	4,370 kg/pcs.	1 pcs.	117293

Dimensions

Type	BP	dP	HP	HP2	LG	tP
AK-Q F 80/30- 400 HCP	80 mm	14 mm	190 mm	150 mm	409 mm	8 mm
AK-Q F 80/30- 800 HCP	80 mm	14 mm	190 mm	150 mm	809 mm	8 mm

Certification

ETA-24/0471

CE mark (Declaration of performance see downloads)
ETA-24/0471

Documents

siFramo - ETA-24/0471